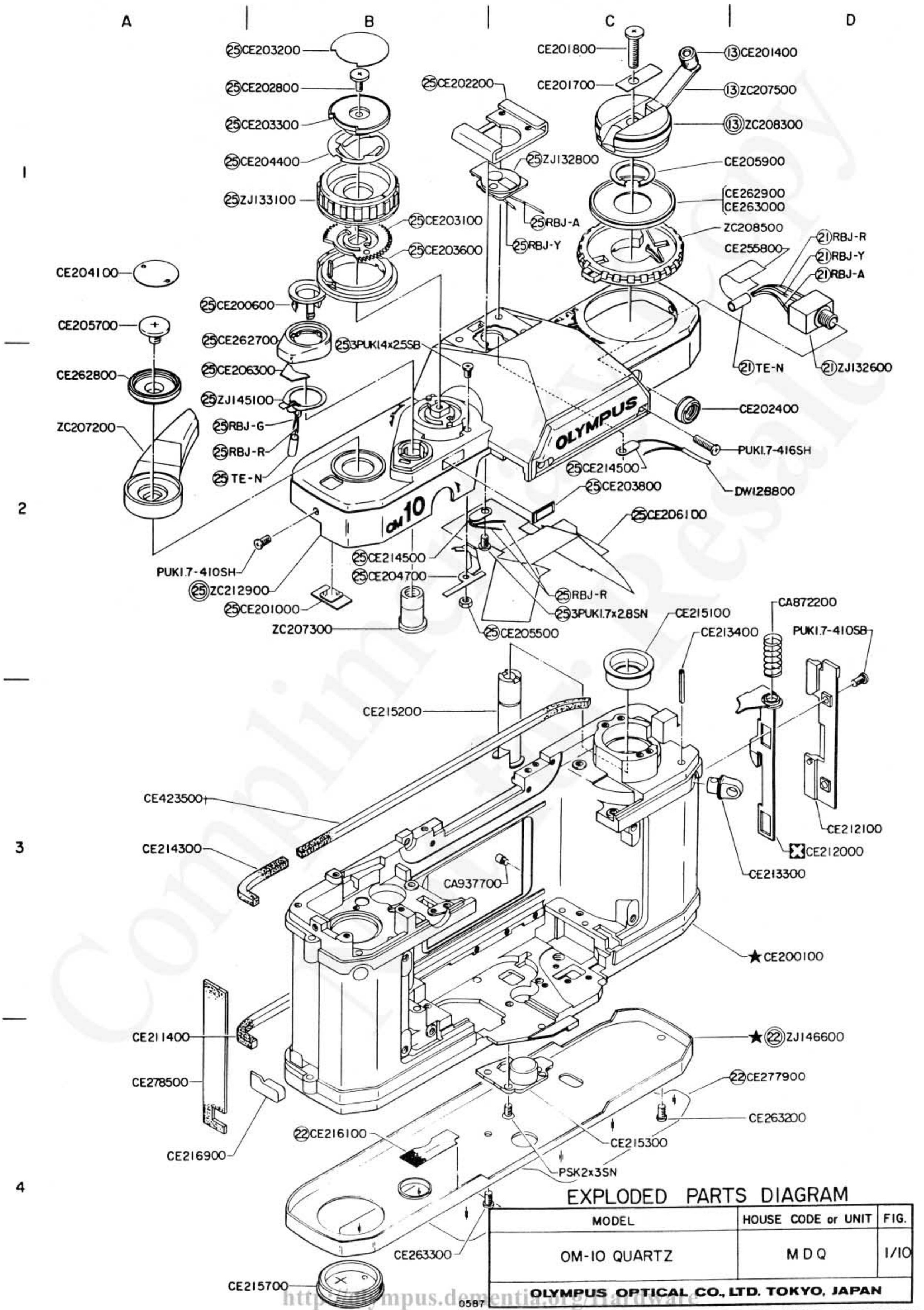

EXPLODED PARTS DIAGRAM

MODEL	HOUSE CODE or UNIT	FIG.
OM-10 QUARTZ	MDQ	1/10

OLYMPUS OPTICAL CO., LTD. TOKYO, JAPAN

0587

http://olympus.dementia.org/Hardware

NOTE : WHEN ORDERING FOR SPARE PARTS, PLEASE CLARIFY A MODEL or HOUSE CODE, PARTS NUMBER AND QUANTITY.

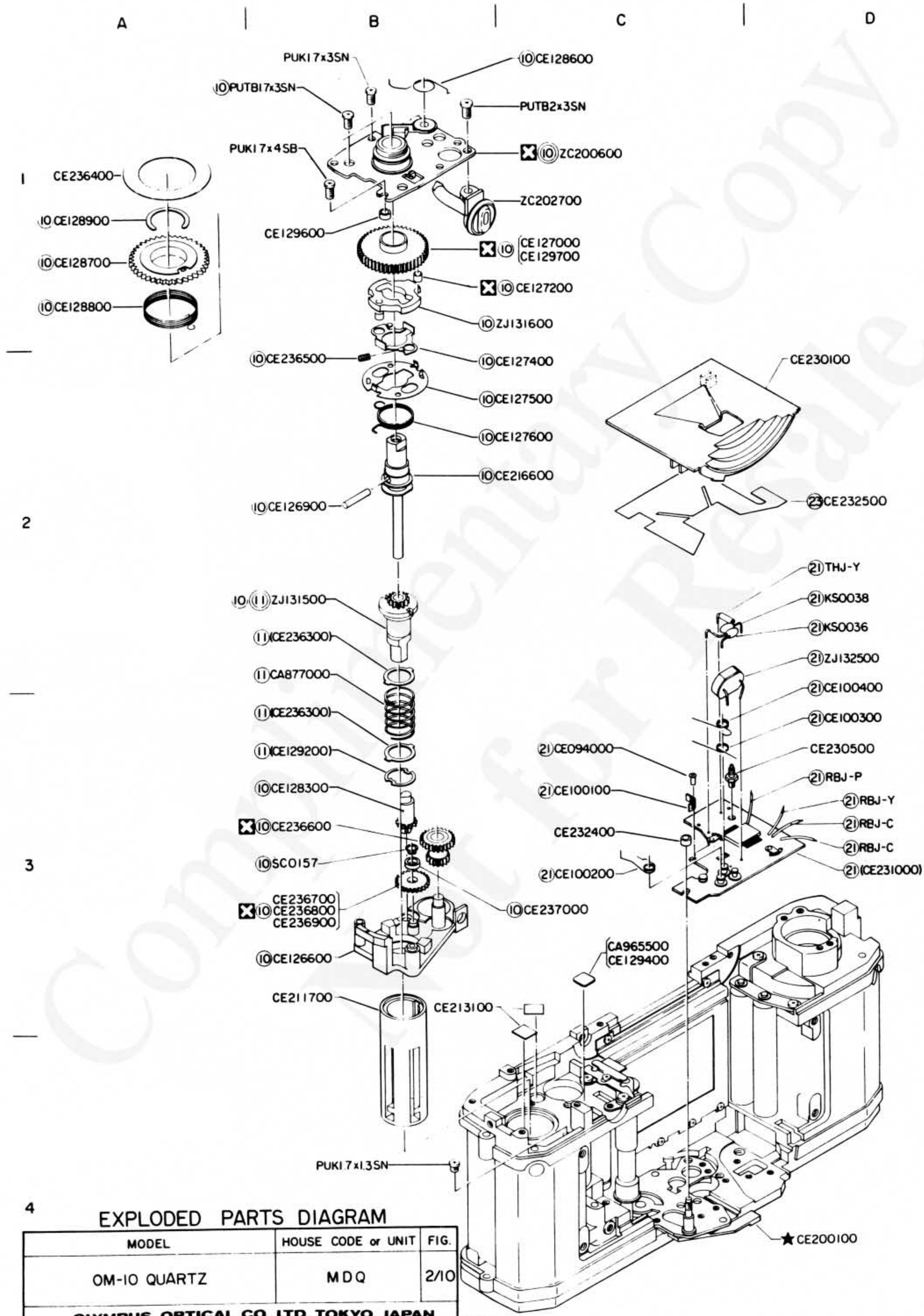

EXPLODED PARTS DIAGRAM

MODEL	HOUSE CODE or UNIT	FIG.
OM-10 QUARTZ	MDQ	2/10
OLYMPUS OPTICAL CO., LTD. TOKYO, JAPAN		

NOTE: WHEN ORDERING FOR SPARE PARTS, PLEASE CLARIFY A MODEL or HOUSE CODE, PARTS NUMBER AND QUANTITY

Complimentary Copy for Resale
http://olympus.documentation.org/Hardware

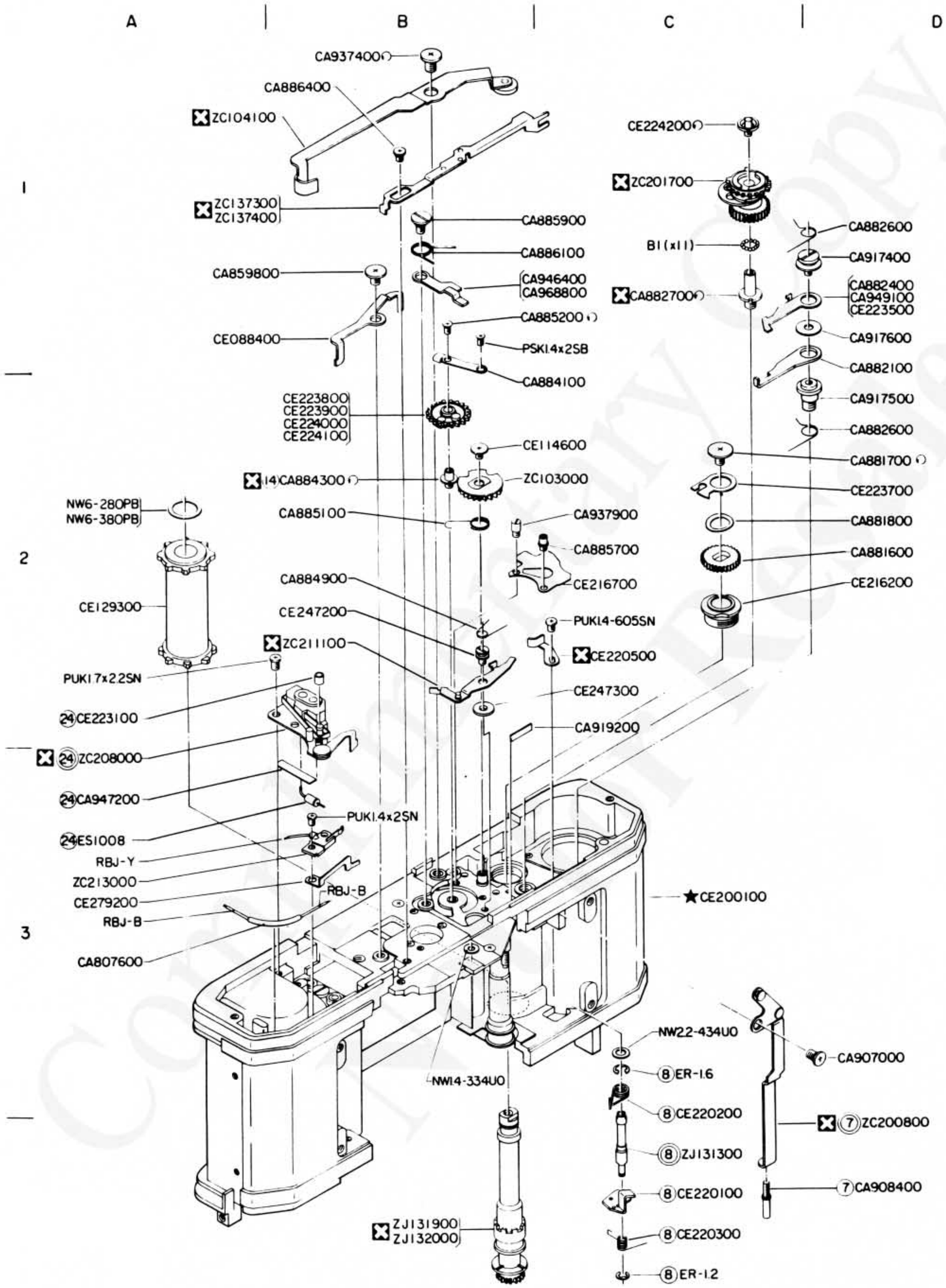

EXPLODED PARTS DIAGRAM

MODEL	HOUSE CODE or UNIT	FIG.
OM-10 QUARTZ	MDQ	3/10
OLYMPUS OPTICAL CO., LTD. TOKYO, JAPAN		

1180

NOTE : WHEN ORDERING FOR SPARE PARTS, PLEASE CLARIFY A MODEL or HOUSE CODE, PARTS NUMBER AND QUANTITY.

http://olympus.classicdigital.com/forum

A B C D

1

2

3

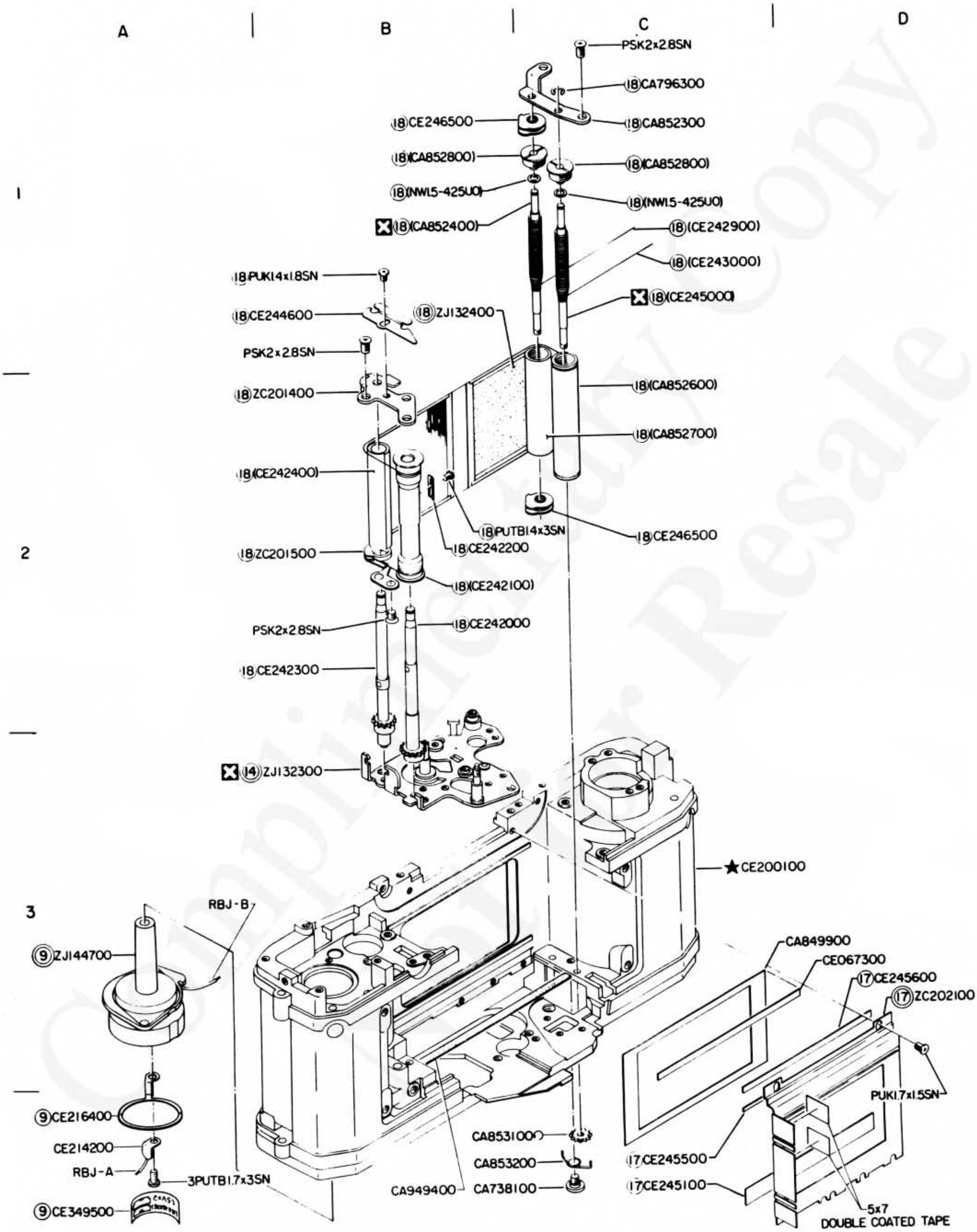

4

EXPLODED PARTS DIAGRAM

MODEL	HOUSE CODE or UNIT	FIG.
OM-10 QUARTZ	MDQ	4/10
OLYMPUS OPTICAL CO., LTD. TOKYO, JAPAN		

1180

NOTE : WHEN ORDERING FOR SPARE PARTS, PLEASE CLARIFY A MODEL or HOUSE CODE, PARTS NUMBER AND QUANTITY.

Not for Resale
http://olympus.dgmentia.org/Hardware

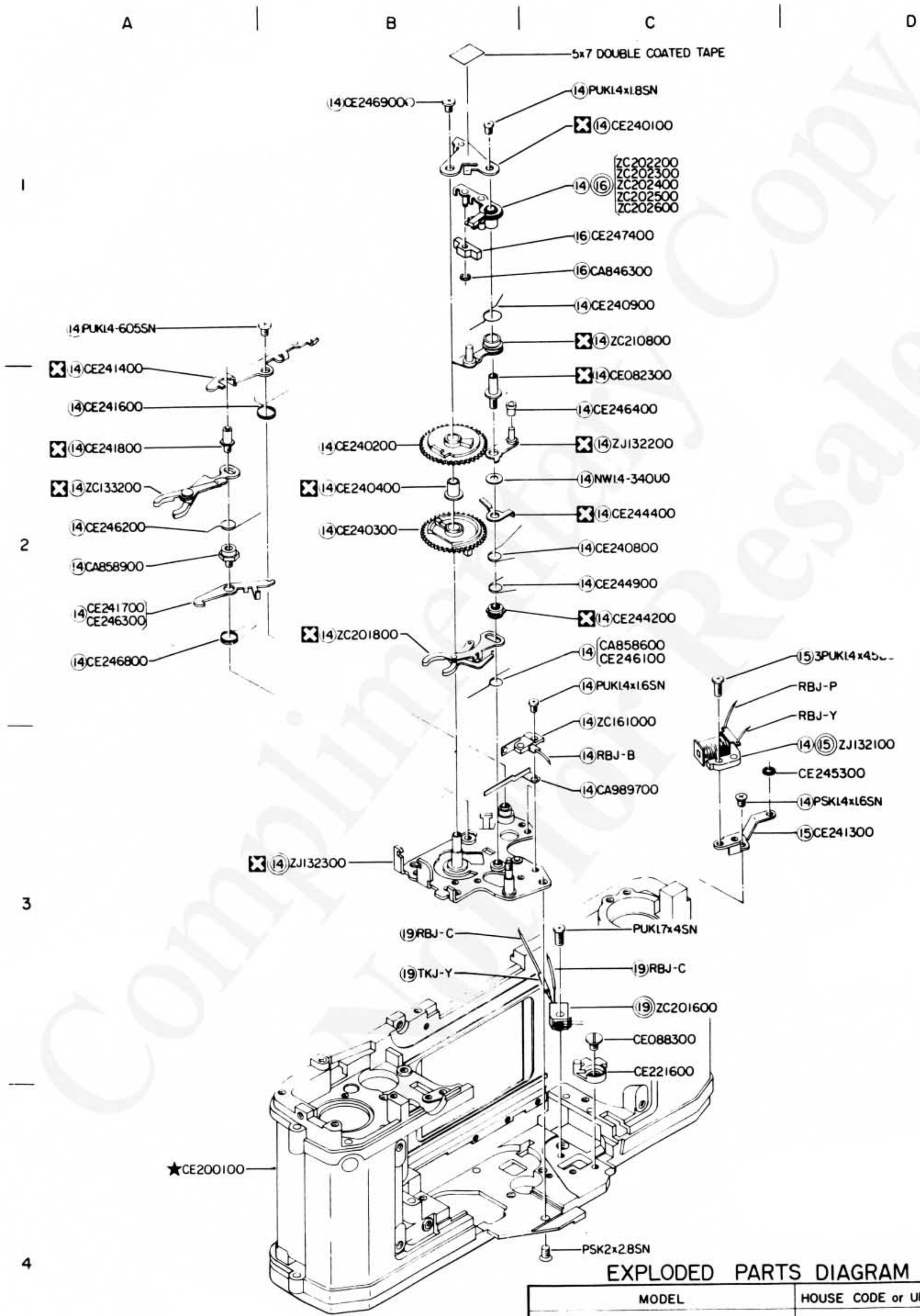

EXPLODED PARTS DIAGRAM

MODEL	HOUSE CODE or UNIT	FIG.
OM-10 QUARTZ	MDQ	5/10
OLYMPUS OPTICAL CO., LTD. TOKYO, JAPAN		

1180

NOTE : WHEN ORDERING FOR SPARE PARTS, PLEASE CLARIFY A MODEL or HOUSE CODE, PARTS NUMBER AND QUANTITY.

Complimentary Copy Not for Resale
http://olympus.dementia.org/Hardware

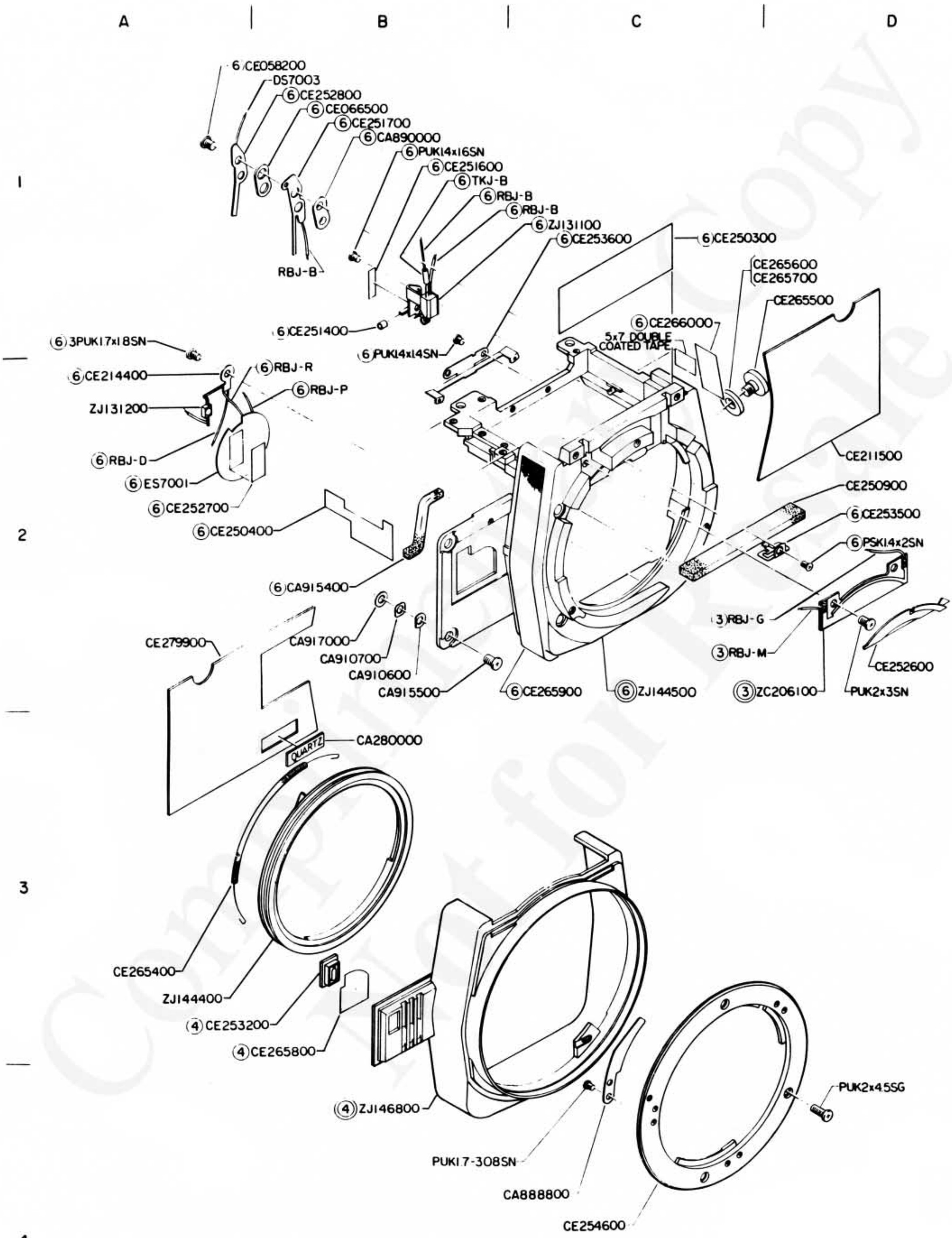

EXPLODED PARTS DIAGRAM

MODEL	HOUSE CODE or UNIT	FIG.
OM-10 QUARTZ	MDQ	6/10
OLYMPUS OPTICAL CO., LTD. TOKYO, JAPAN		

1180

NOTE : WHEN ORDERING FOR SPARE PARTS, PLEASE CLARIFY A MODEL or HOUSE CODE, PARTS NUMBER AND QUANTITY.

Copyright for the Internet Archive
http://olympus-lens.org/Head Parts

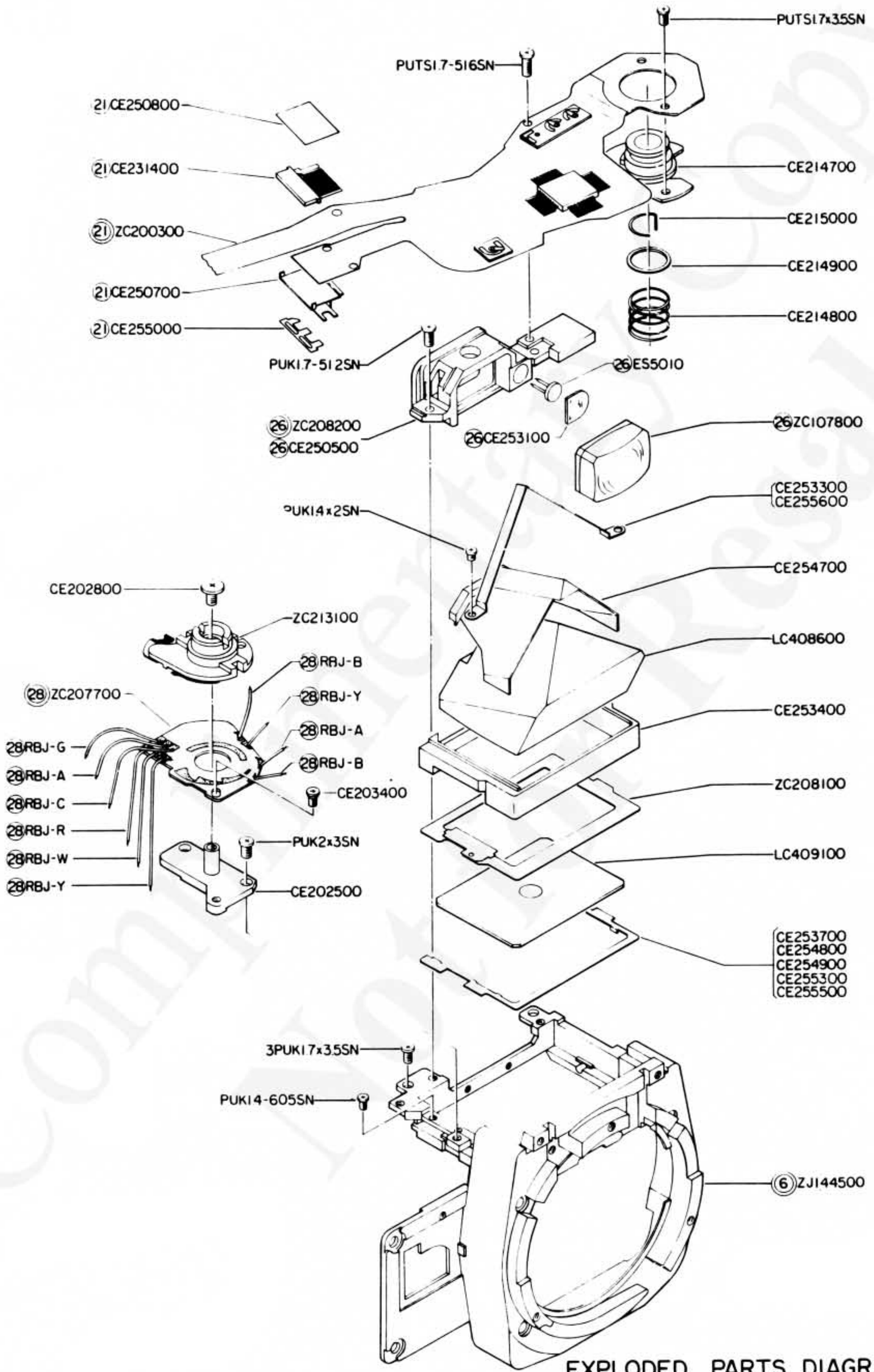

EXPLODED PARTS DIAGRAM

MODEL	HOUSE CODE or UNIT	FIG.
OM-10 QUARTZ	MDQ	7/10
OLYMPUS OPTICAL CO., LTD. TOKYO, JAPAN		

1180

NOTE WHEN ORDERING FOR SPARE PARTS, PLEASE CLARIFY A MODEL or HOUSE CODE, PARTS NUMBER AND QUANTITY

http://olympus.demonia.org/Hardware

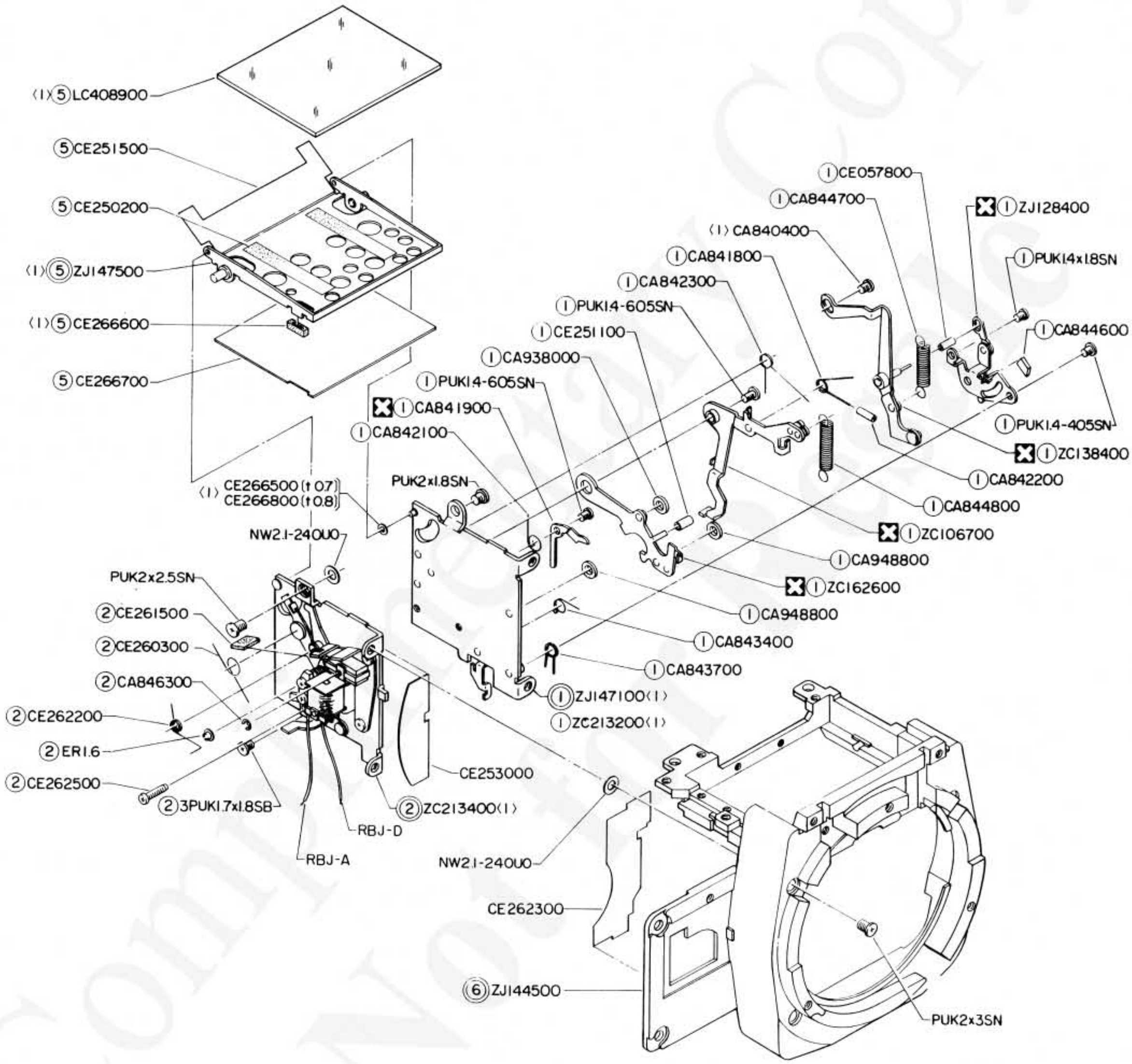

EXPLODED PARTS DIAGRAM

MODEL	HOUSE CODE or UNIT	FIG.
OM-10 QUARTZ	MDQ	8/10
OLYMPUS OPTICAL CO., LTD. TOKYO, JAPAN		

0882

NOTE : WHEN ORDERING FOR SPARE PARTS, PLEASE CLARIFY A MODEL or HOUSE CODE, PARTS NUMBER AND QUANTITY.

Complimentary Not for Sale
http://olympus.dementia.org/Hardware

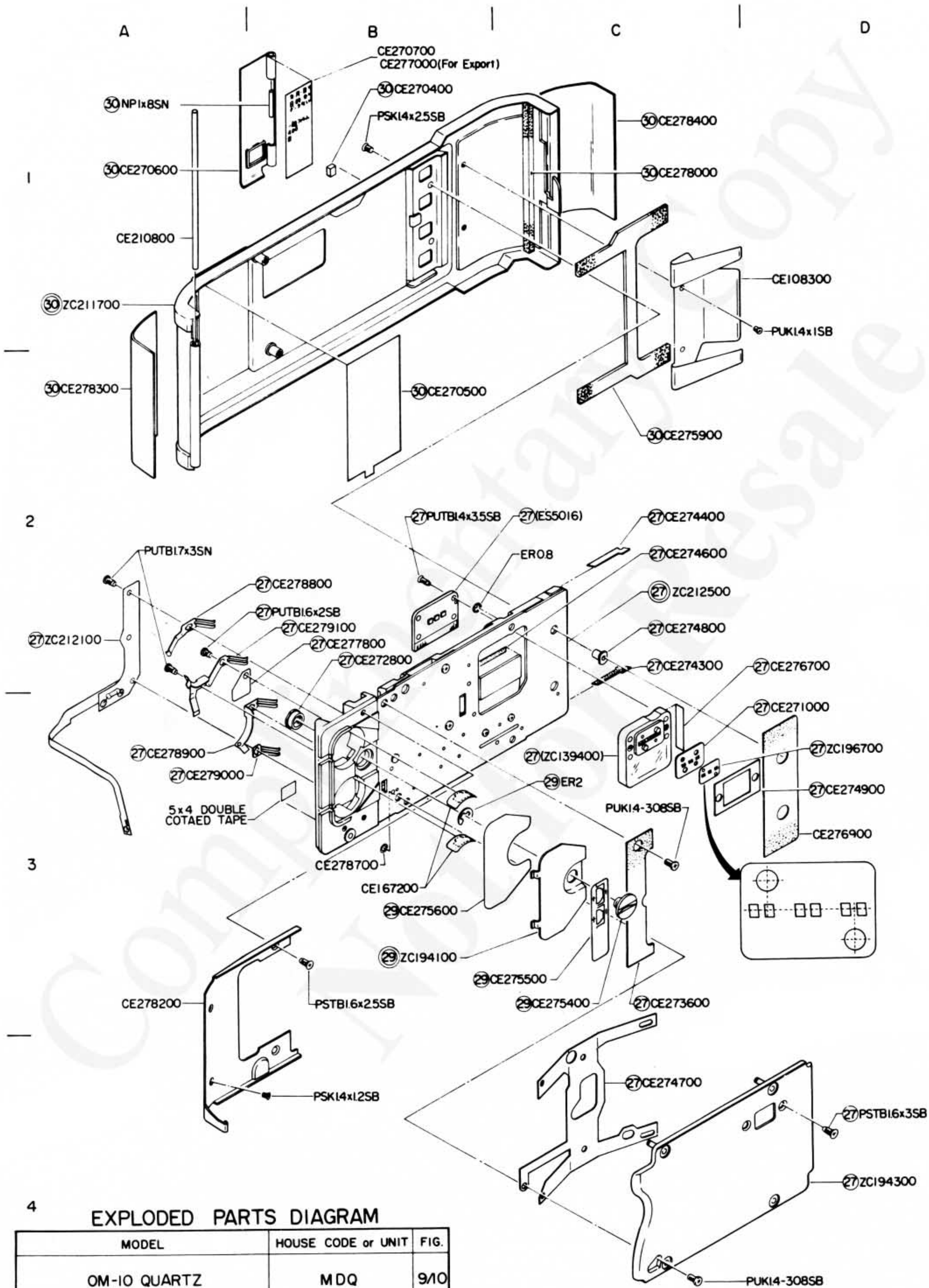

EXPLODED PARTS DIAGRAM

MODEL	HOUSE CODE or UNIT	FIG.
OM-10 QUARTZ	MDQ	9/10
OLYMPUS OPTICAL CO., LTD. TOKYO, JAPAN		

1180

NOTE : WHEN ORDERING FOR SPARE PARTS, PLEASE CLARIFY A MODEL or HOUSE CODE, PARTS NUMBER AND QUANTITY.

http://olympus.dementia.org/Hardware

A B C D

1

EXAMPLE
RED 65
COLOR·RED
ℓ·65mm

CE202200
ZJ145100 (SW201)
ZJ132800 (J102)
CE214500
TE-N(7)
TE-N(13)
ES5010 (P201)
ZC200300
ZC207700 (RV101) (RV201)
TE-N(13)
TE-N(5)
ZJ132600 (J101)
DS8004(R207, RV204, 203)
(RS0204)(R201)
(KS0071)(C201)
RS0127(R105)
(KS0072)(C105)
KS0035
KS0039(C101)
KS0058
RS0126(R206)
KS0128 (R204)
KS0040(C202)
(RS0204)(R203)
(KS0037)(C203)
RS0129(R205)
(RS0204)(R202)
KS0036(C204)
ES1011(D201)
DS8003(RV103)

2

ZJ132100 (RY102)
THJ-Y(10)
ZC201600 (SW103)
TKJ-Y (6)
KS0038 (C104)
KS0036 (C102)
ZJ132500 (P101)
ZC206100 (RV202)
TKJ-B (8)
CE251700 (SW203)
CE252800
ZJ131100 (SW104)
CA807600
ZC161000 (SW202)
CE214400
ZJ131200 (P102)
ES7001 (SP101)
(RY101)
ZJ144700
CE214200
BATTERY SILVER OXIDE SR44 x 2 or ALKALI-MANGANESE LR44 x 2
CE279800
ZC212100
ZC213000 (SW305)
CE279200

3

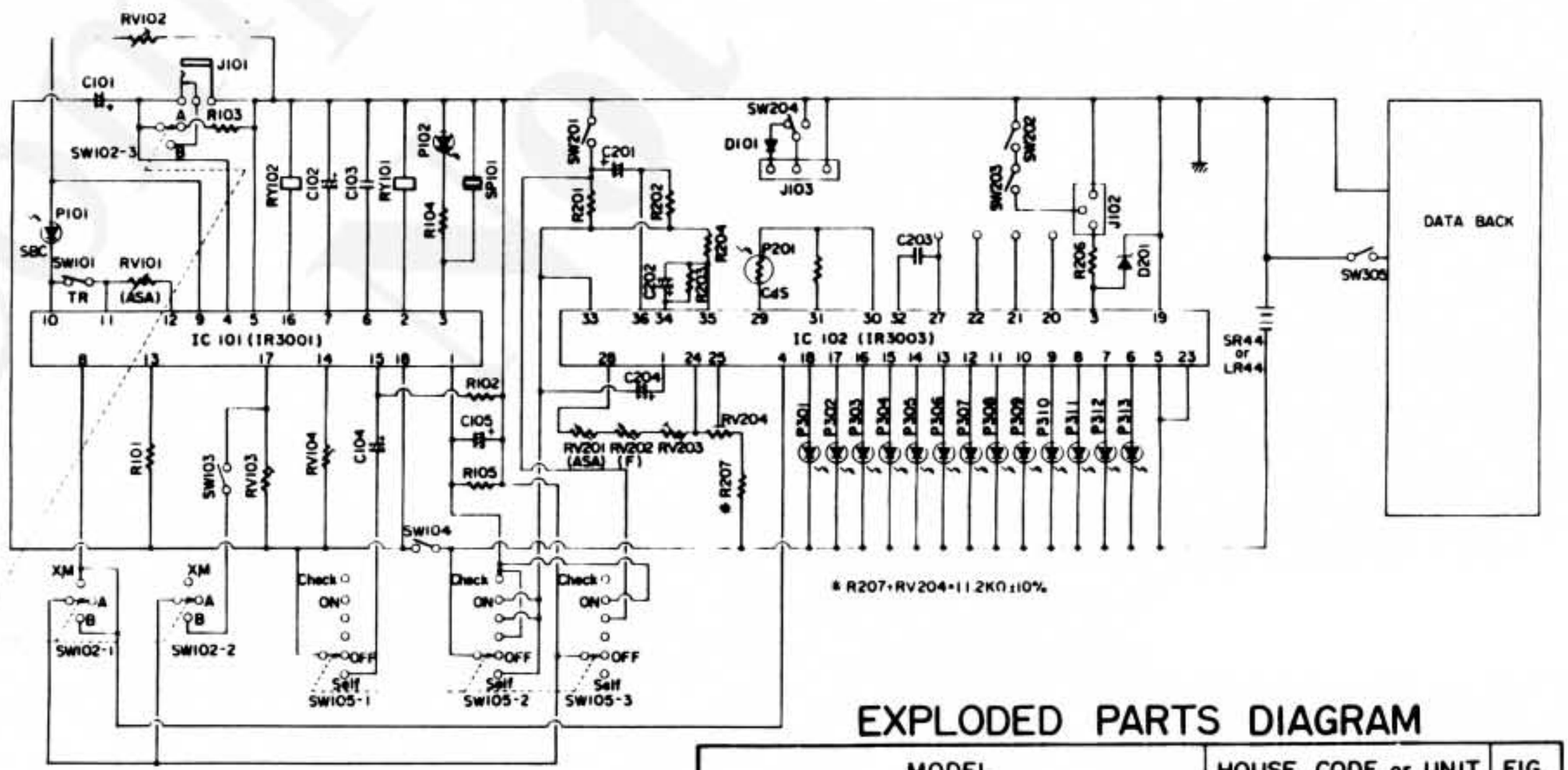

4

EXPLODED PARTS DIAGRAM

MODEL	HOUSE CODE or UNIT	FIG.
OM-10 QUARTZ	MDQ	10/10
OLYMPUS OPTICAL CO., LTD. TOKYO, JAPAN		

1180

NOTE : WHEN ORDERING FOR SPARE PARTS, PLEASE CLARIFY A MODEL or HOUSE CODE, PARTS NUMBER AND QUANTITY.

http://olympus.dementia.org/Hardware