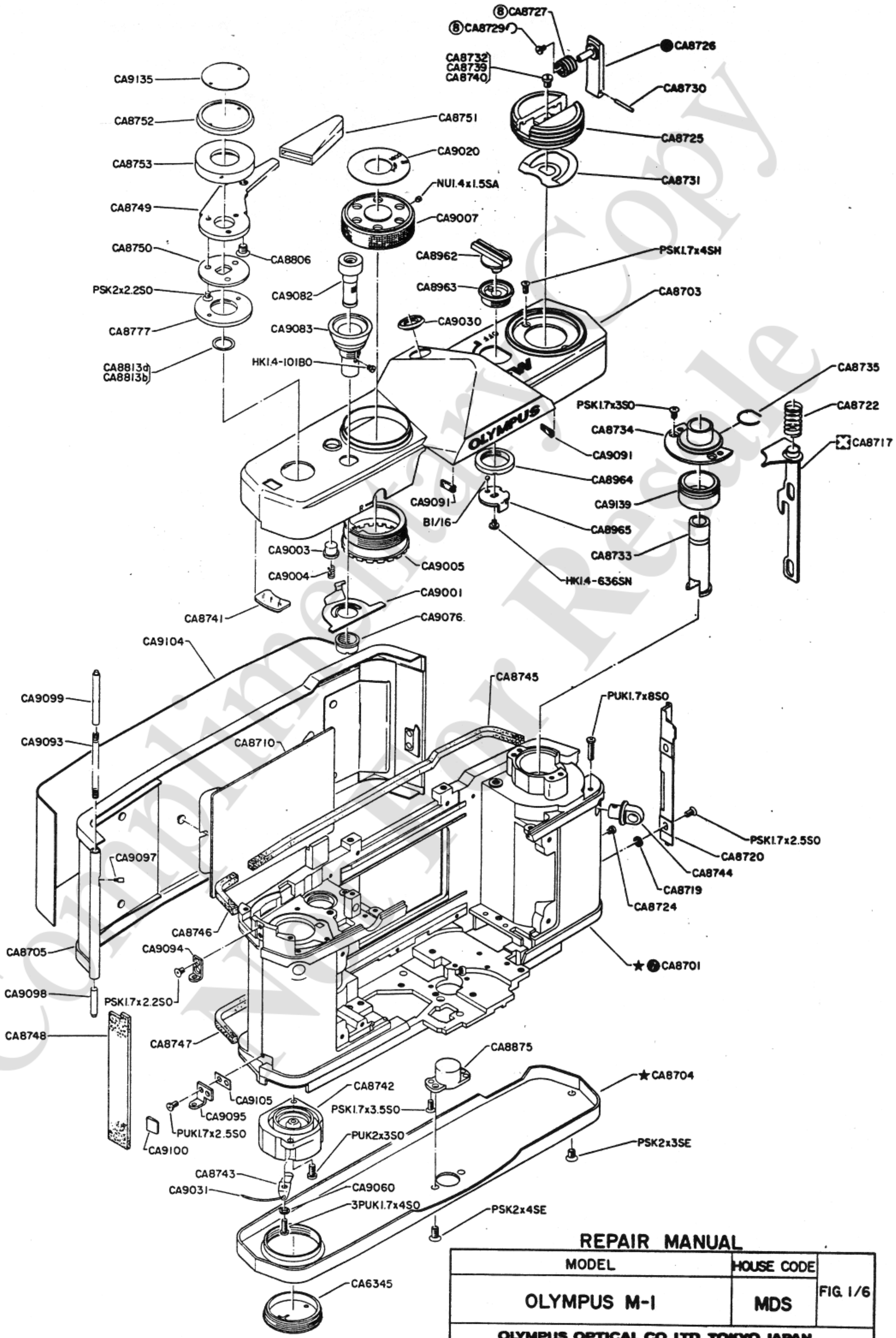

REPAIR MANUAL

MODEL	HOUSE CODE	
OLYMPUS M-I	MDS	FIG. 1/6
OLYMPUS OPTICAL CO., LTD. TOKYO, JAPAN		

Complimentary Copy Not for Resale

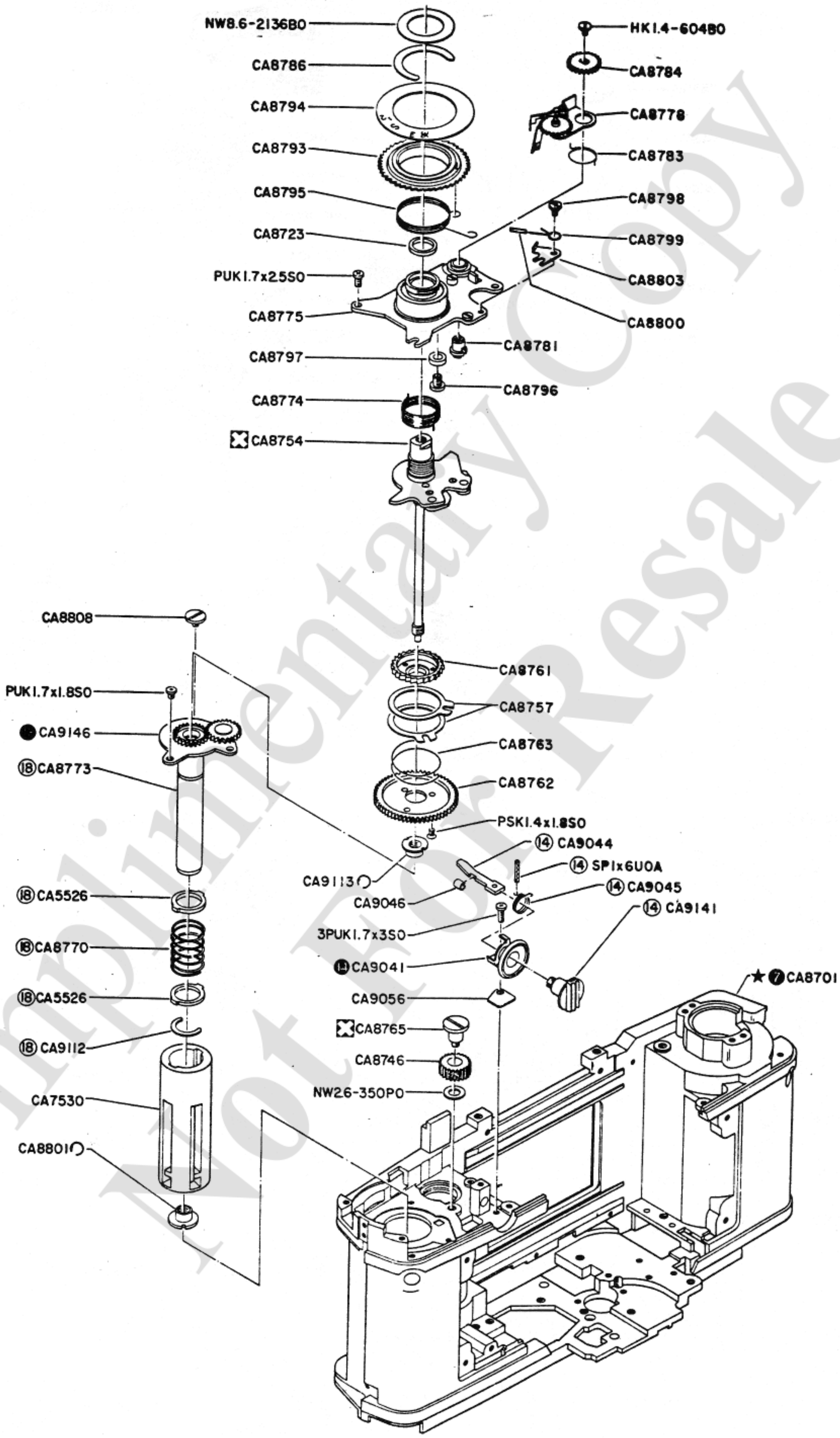

REPAIR MANUAL

MODEL	HOUSE CODE	
OLYMPUS M-1	MDS	FIG. 2/6
OLYMPUS OPTICAL CO., LTD. TOKYO, JAPAN		

Complimentary Copy
Not For Resale

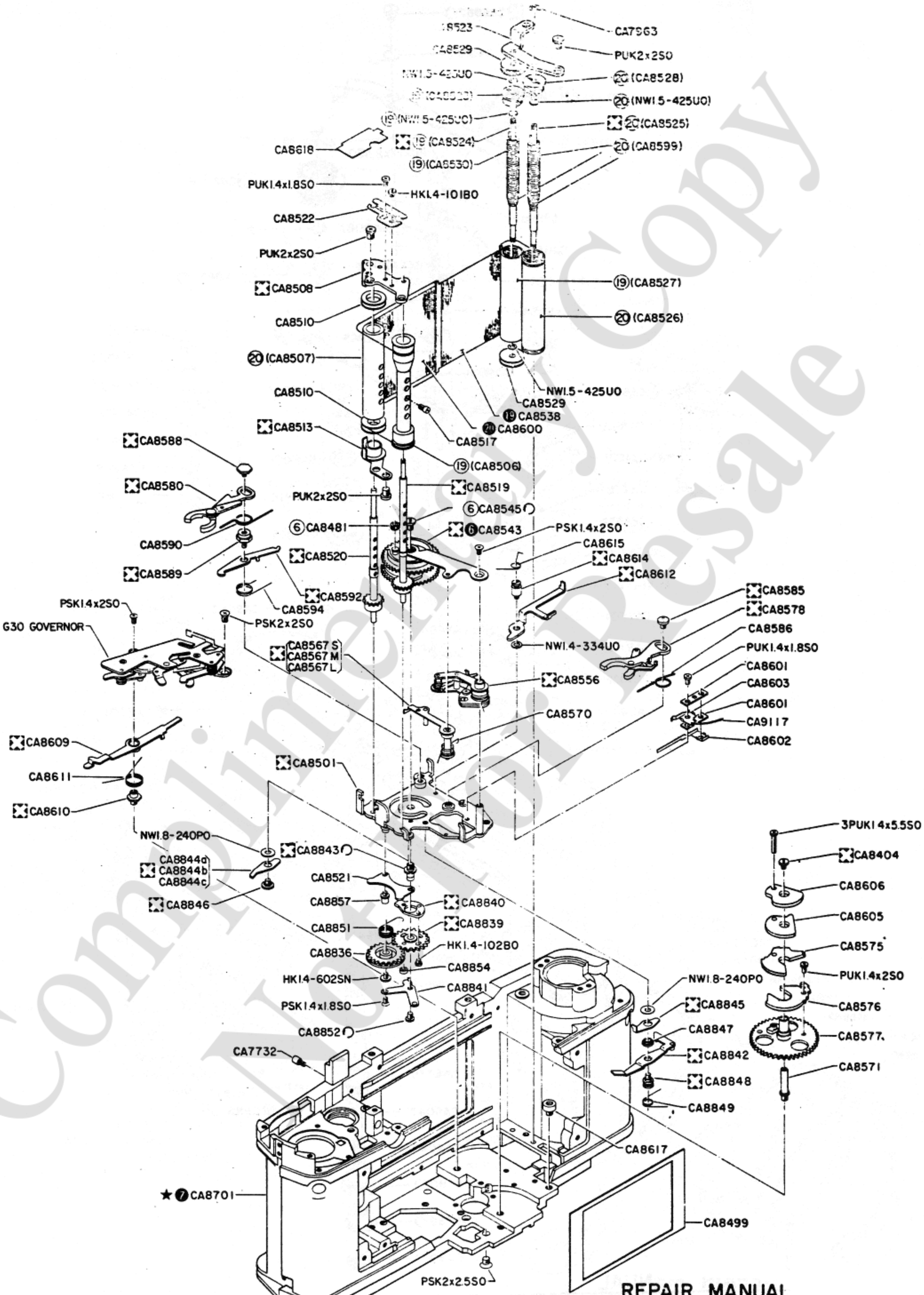

REPAIR MANUAL

MODEL	HOUSE CODE	
OLYMPUS M-1	MDS	FIG. 3/6
OLYMPUS OPTICAL CO., LTD. TOKYO, JAPAN		

Compliments Only Not for Resale

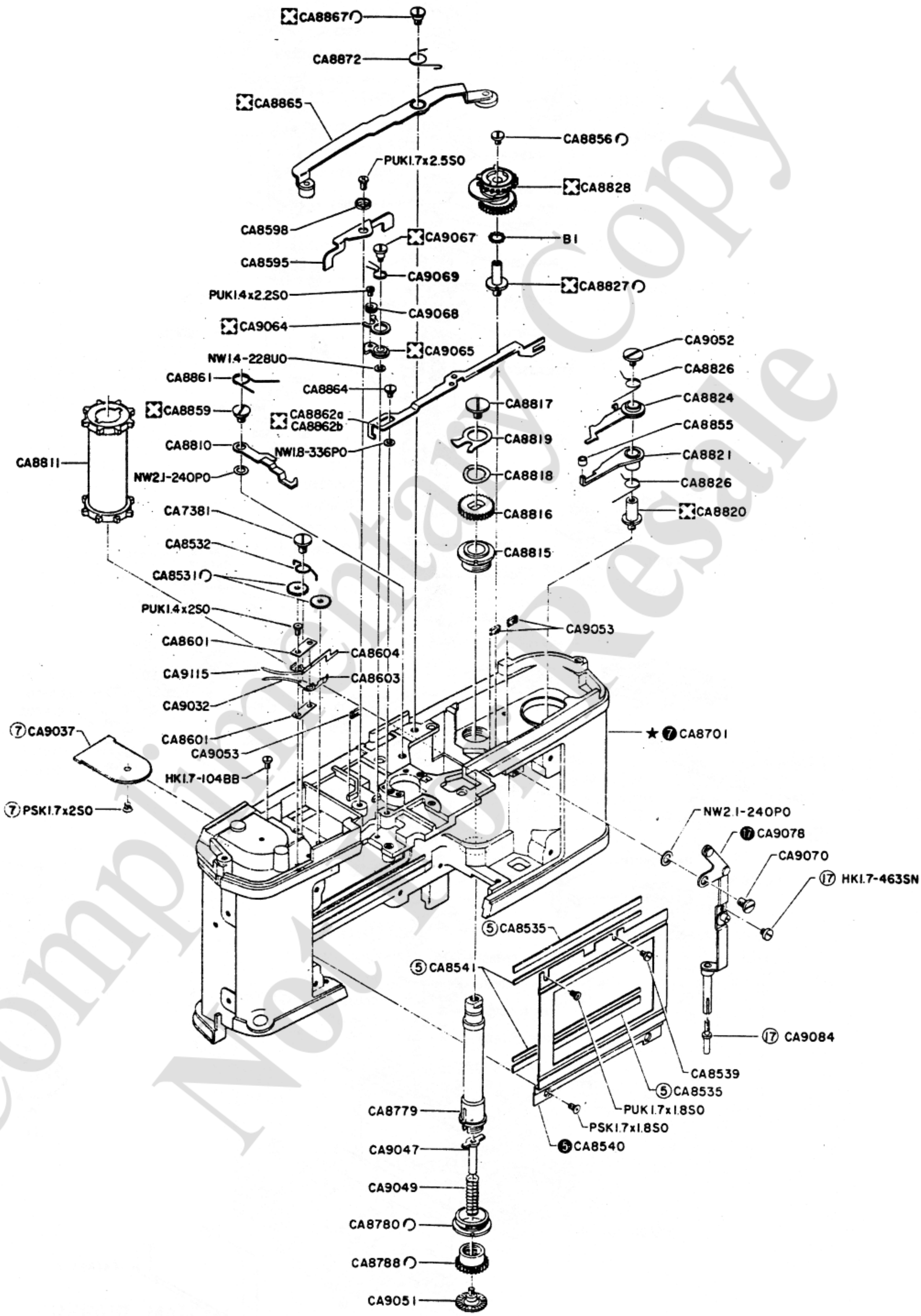

REPAIR MANUAL

MODEL	HOUSE CODE	
OLYMPUS M-1	MDS	FIG. 4/6
OLYMPUS OPTICAL CO., LTD. TOKYO, JAPAN		

Complimentary Copy
Not for Resale

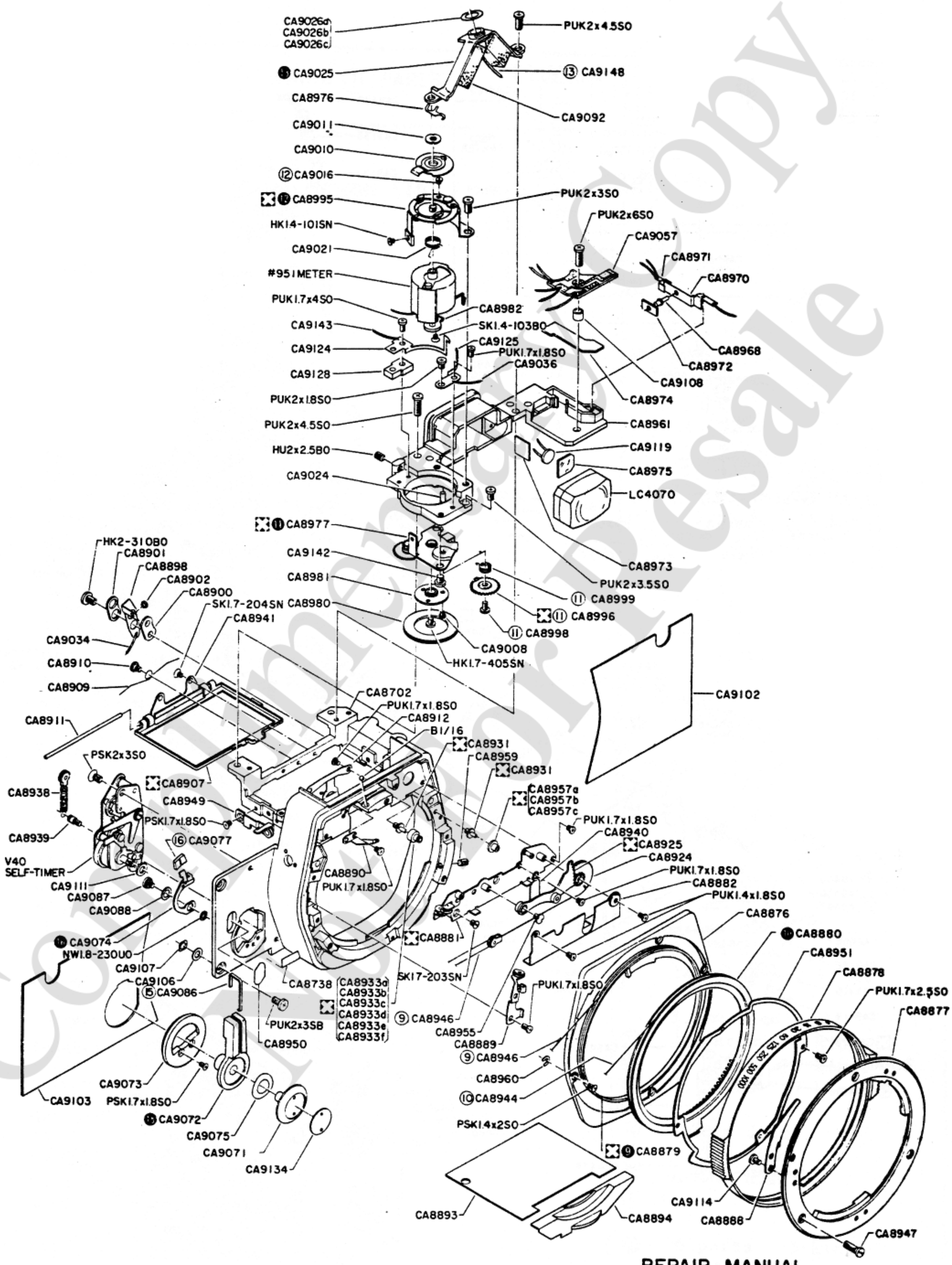

REPAIR MANUAL

MODEL	HOUSE CODE	
OLYMPUS M-I	MDS	FIG. 5/6
OLYMPUS OPTICAL CO., LTD. TOKYO, JAPAN		

Contemporary Camera Not for Resale

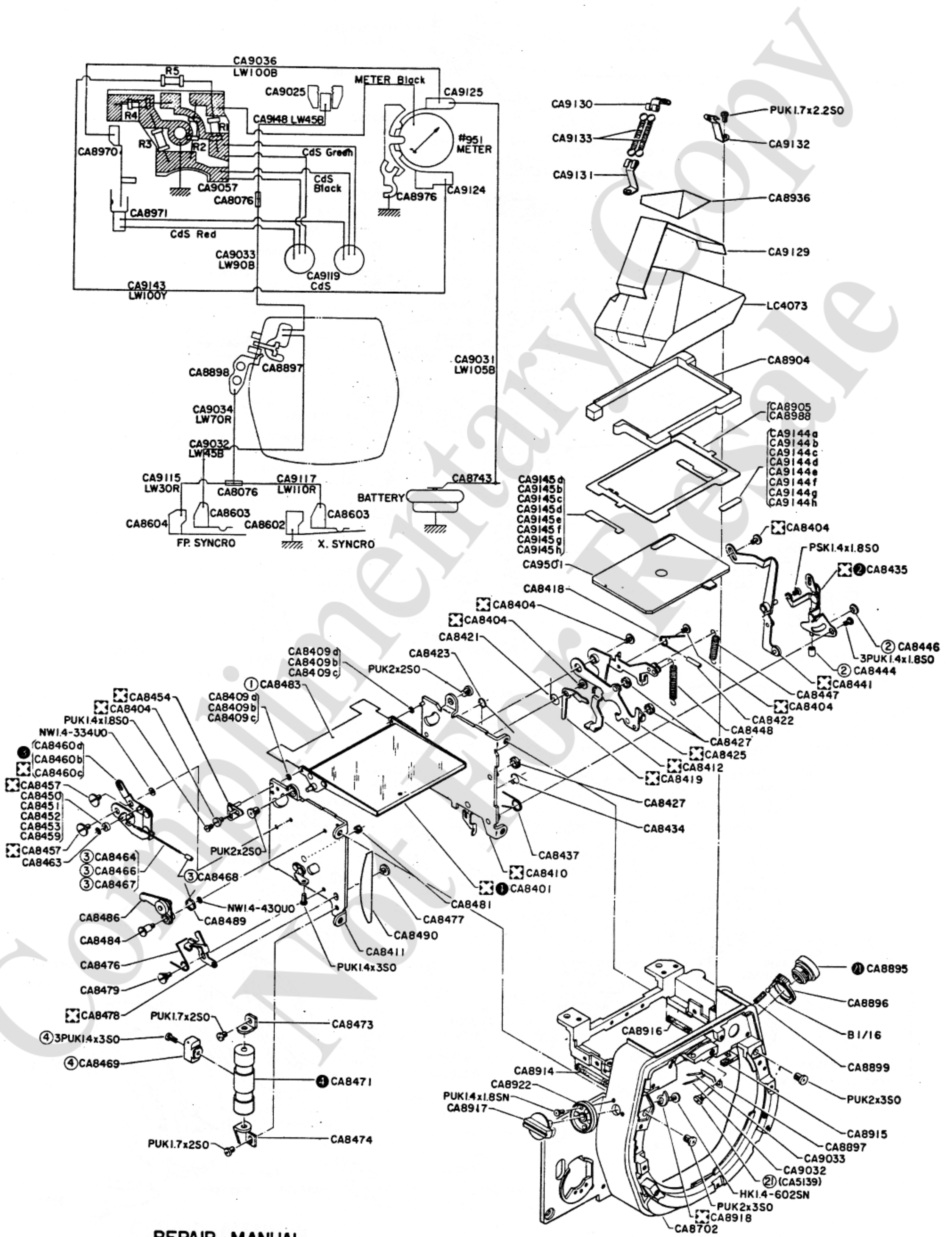

REPAIR MANUAL

MODEL	HOUSE CODE	
OLYMPUS M-1	MDS	FIG. 6/6
OLYMPUS OPTICAL CO., LTD. TOKYO, JAPAN		

Complimentary Copy
Not For Resale

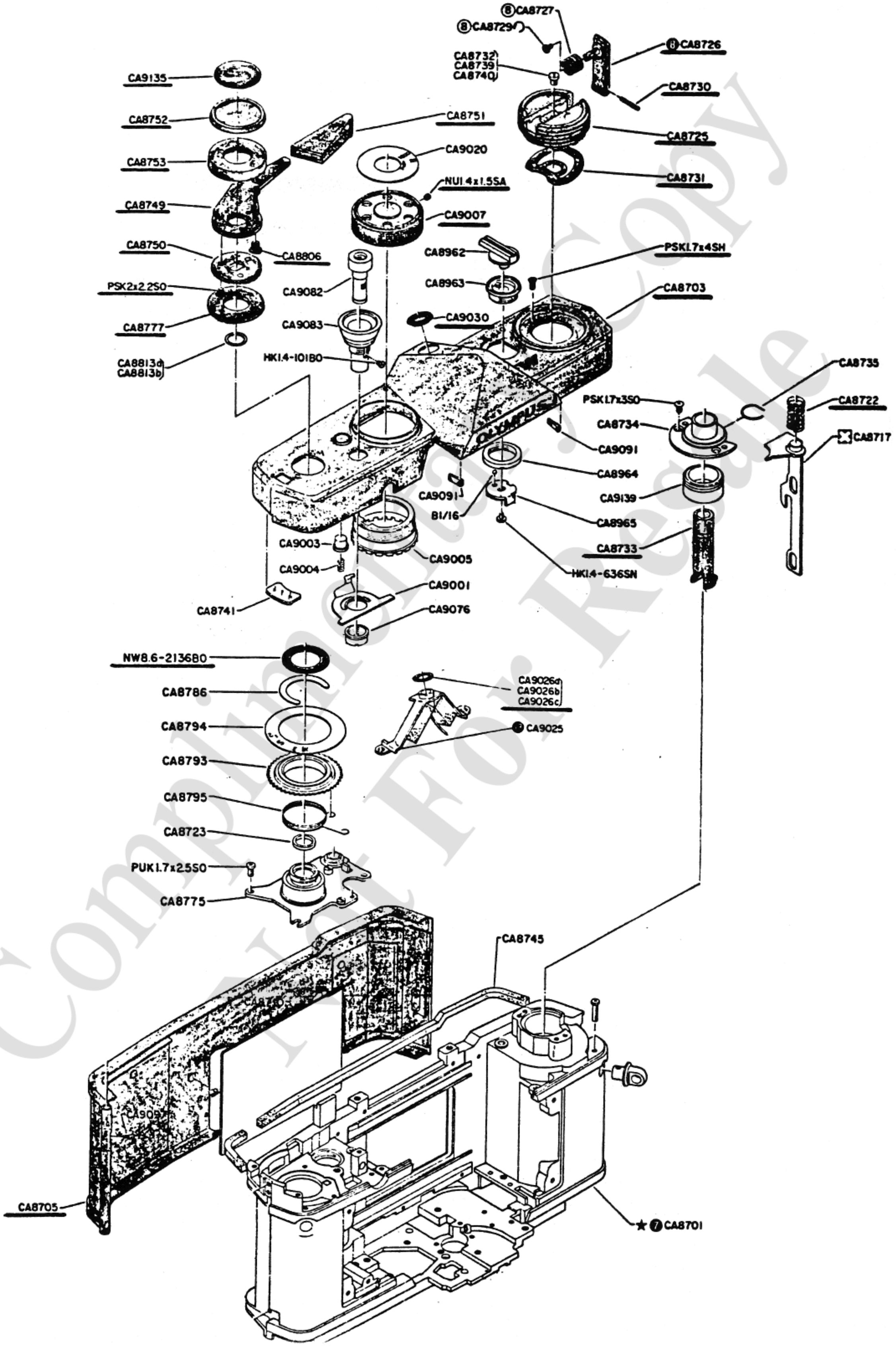

Compliments Not For Resale

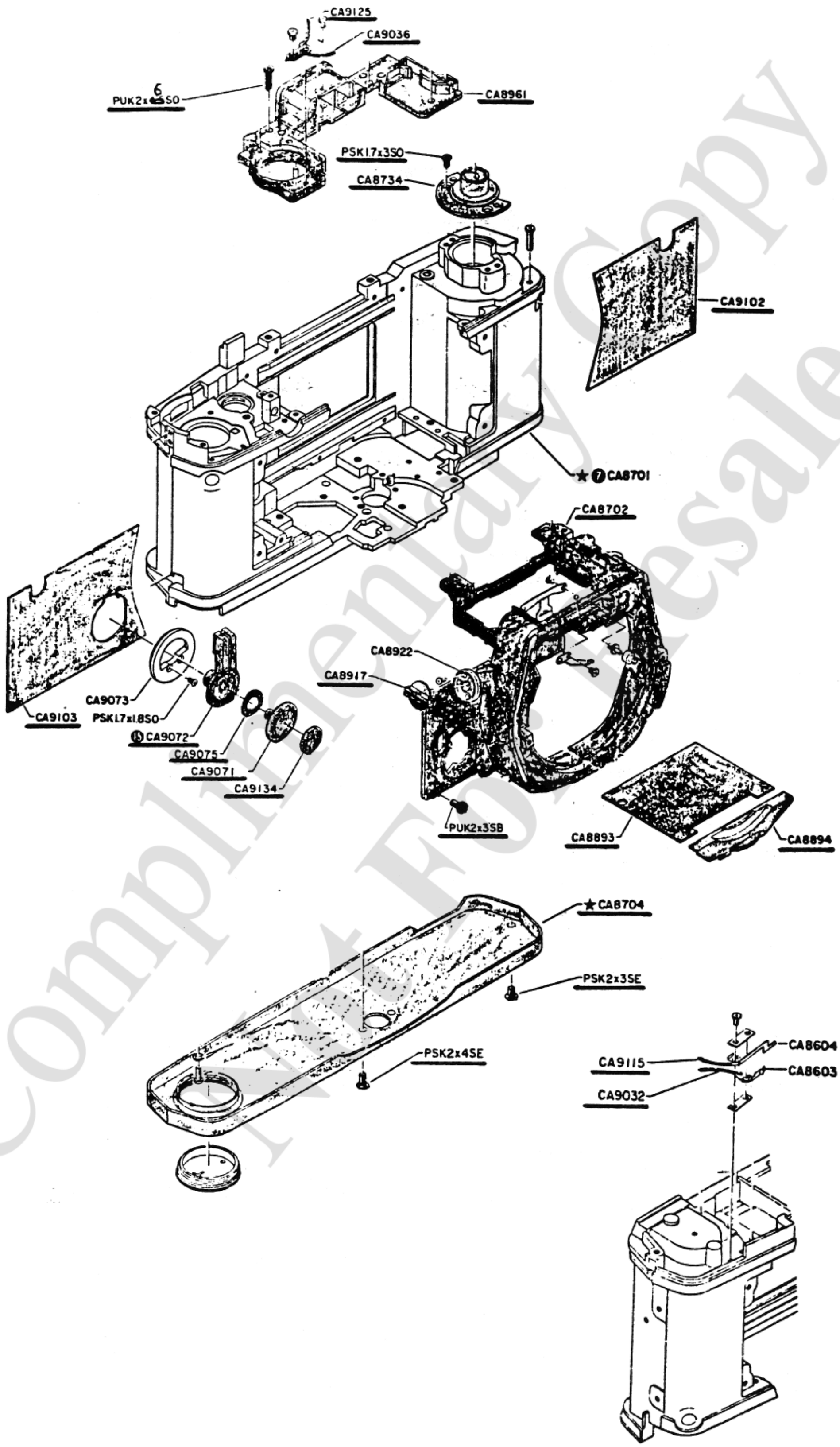

Complimentary Copy Not For Resale

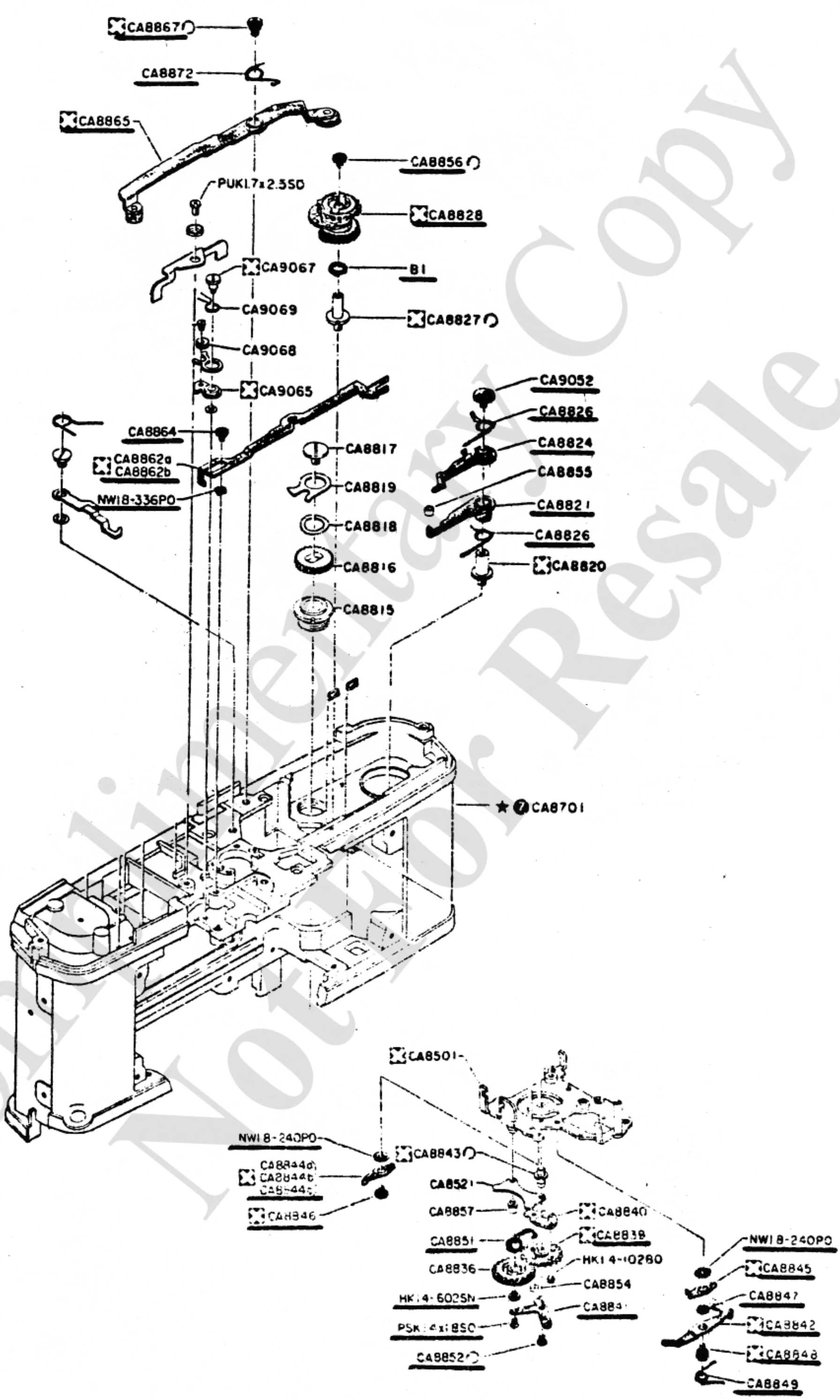

Complimentary Copy
Not For Resale

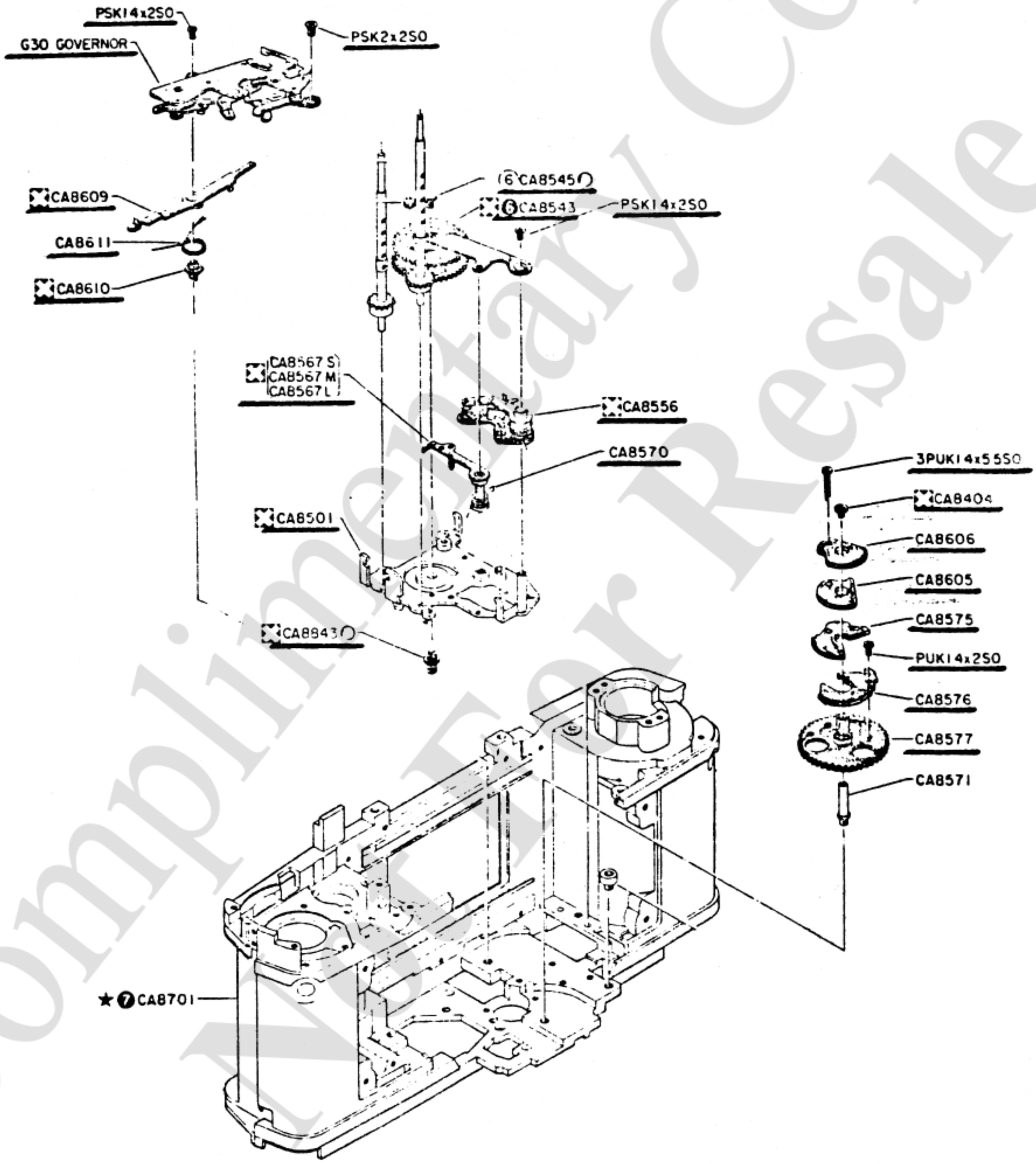

Complimentary Copy
Not For Resale

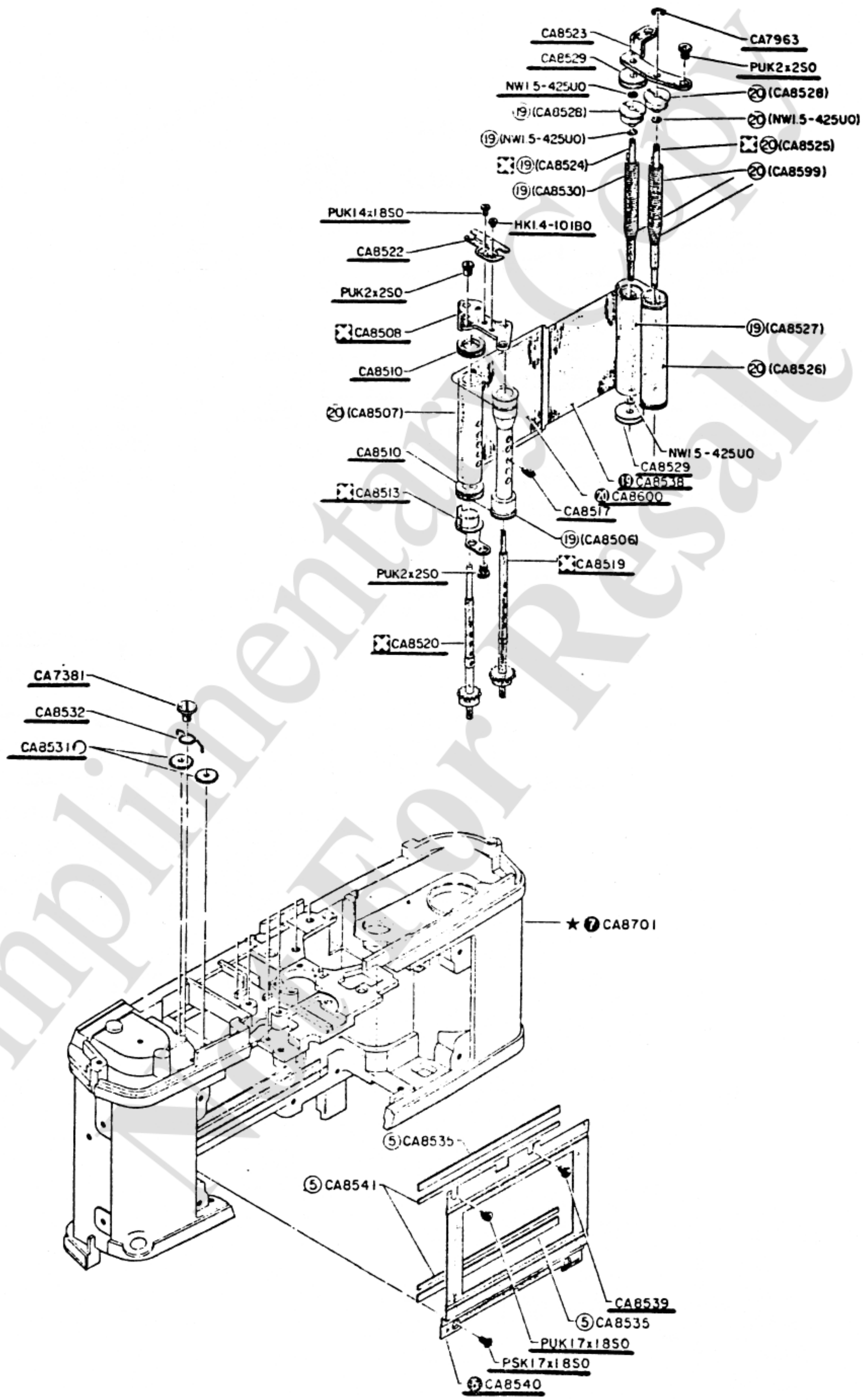

Complimentary Copy
Not For Resale

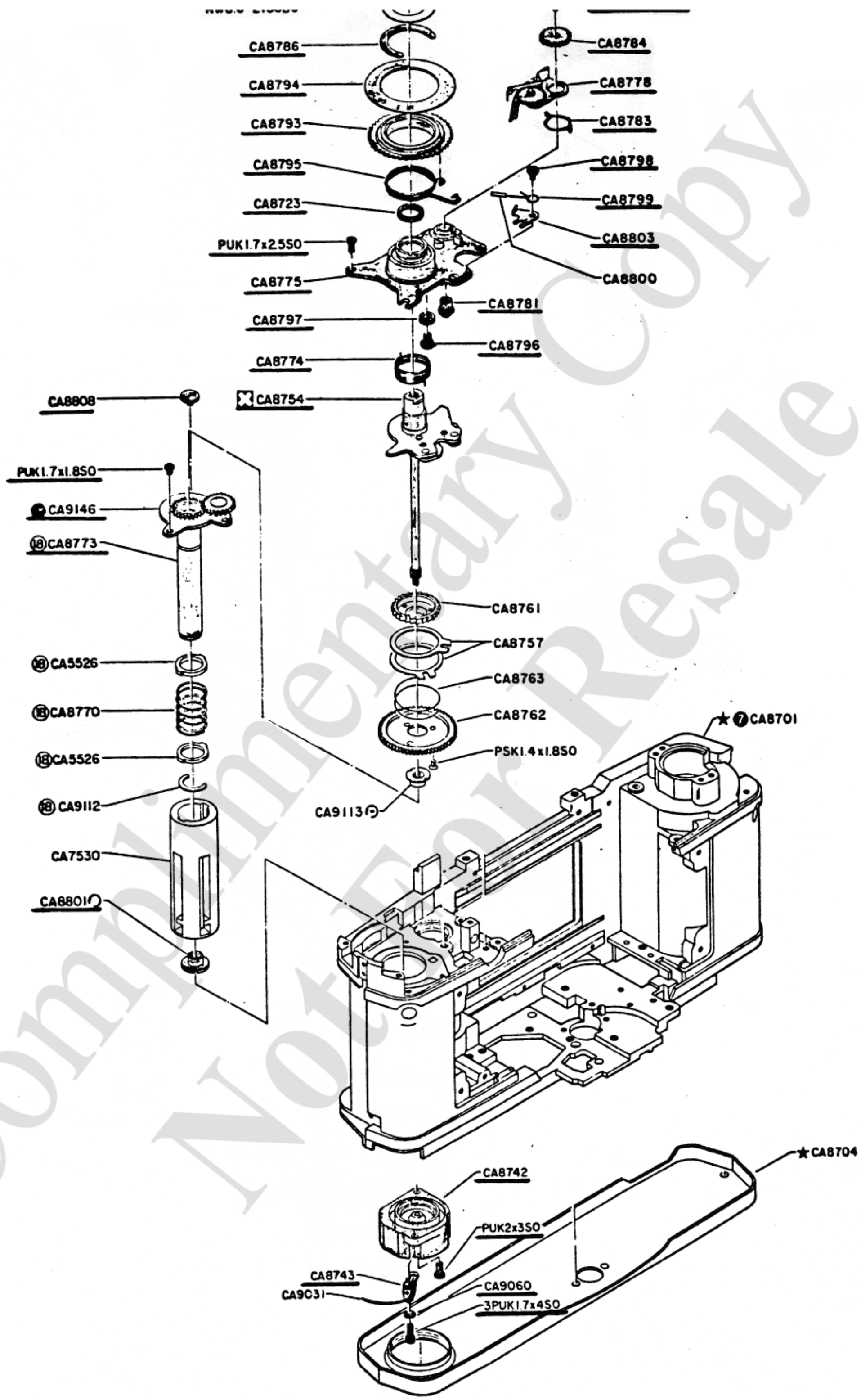

Complimentary Copy
Not For Resale

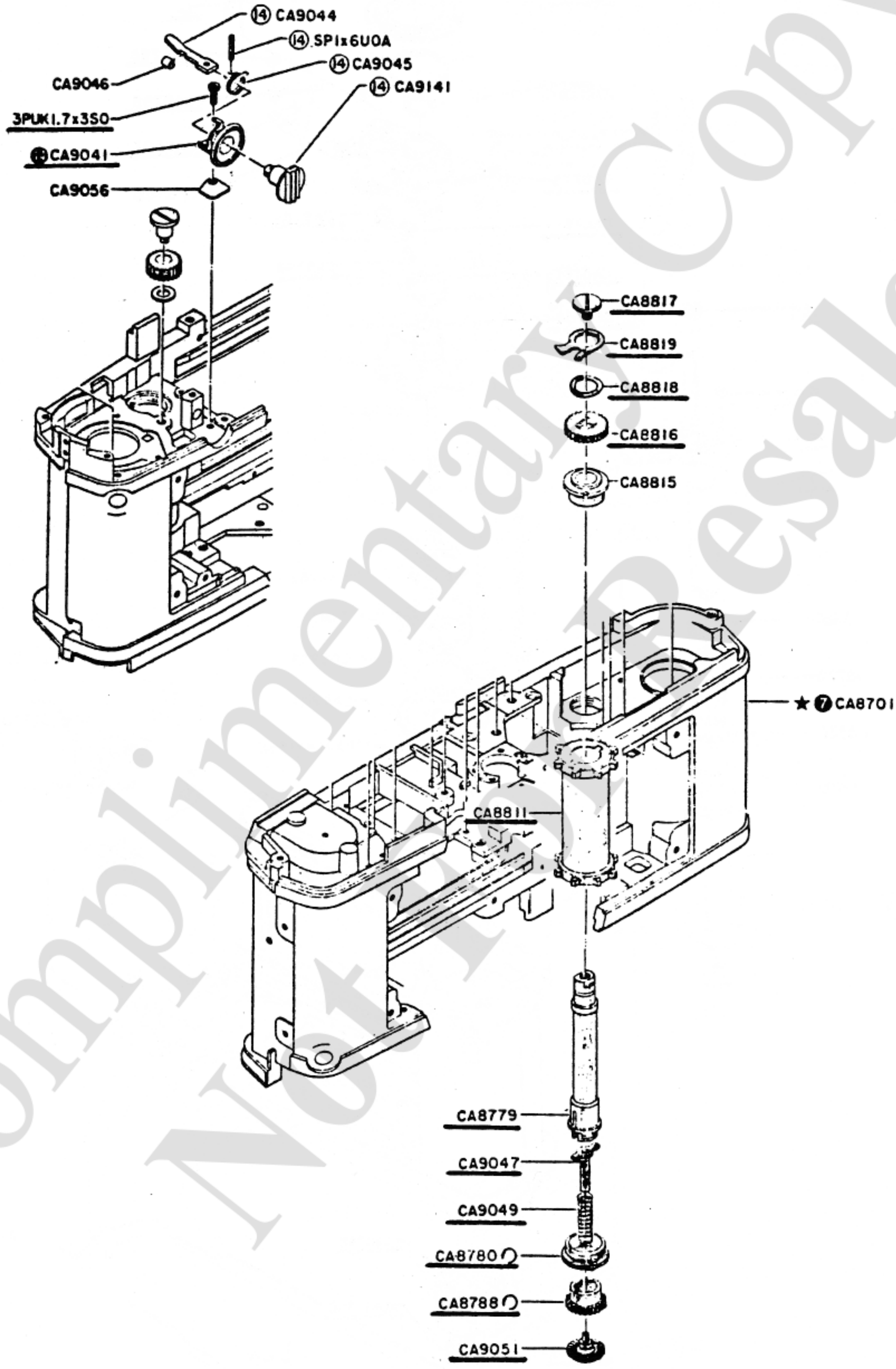

Complimentary Copy
Not for Resale

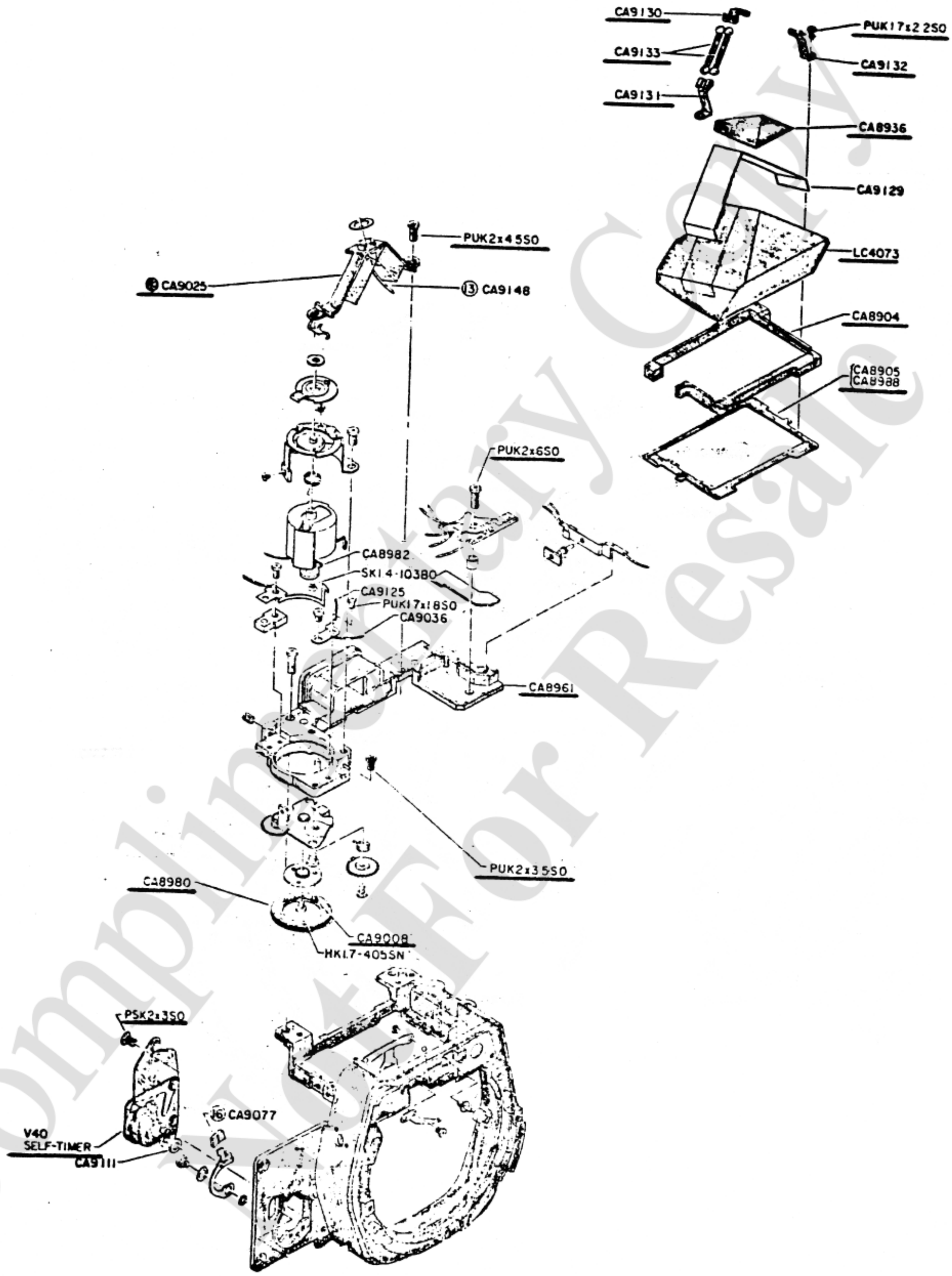

Complimentary Copy
NOT For Resale

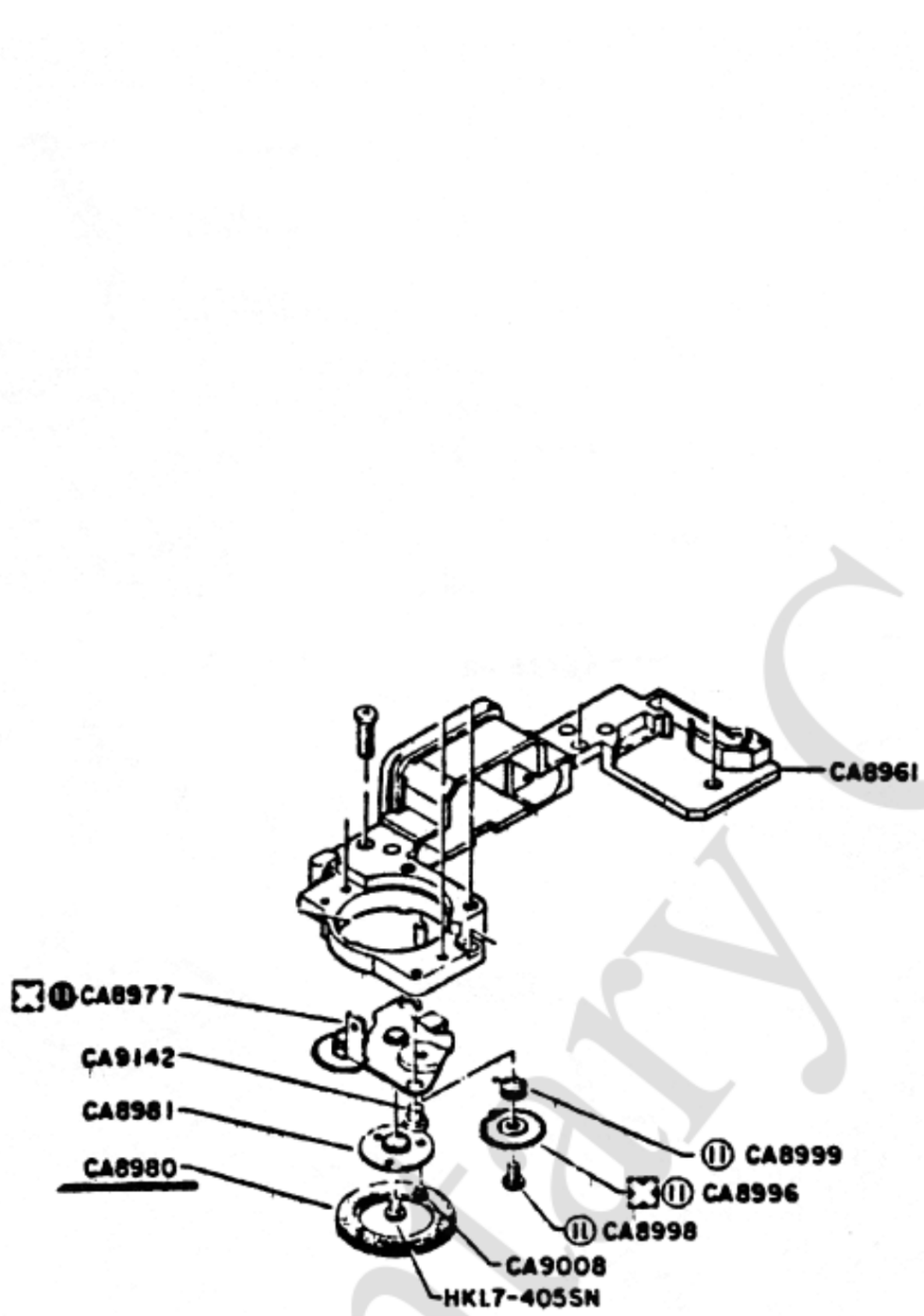

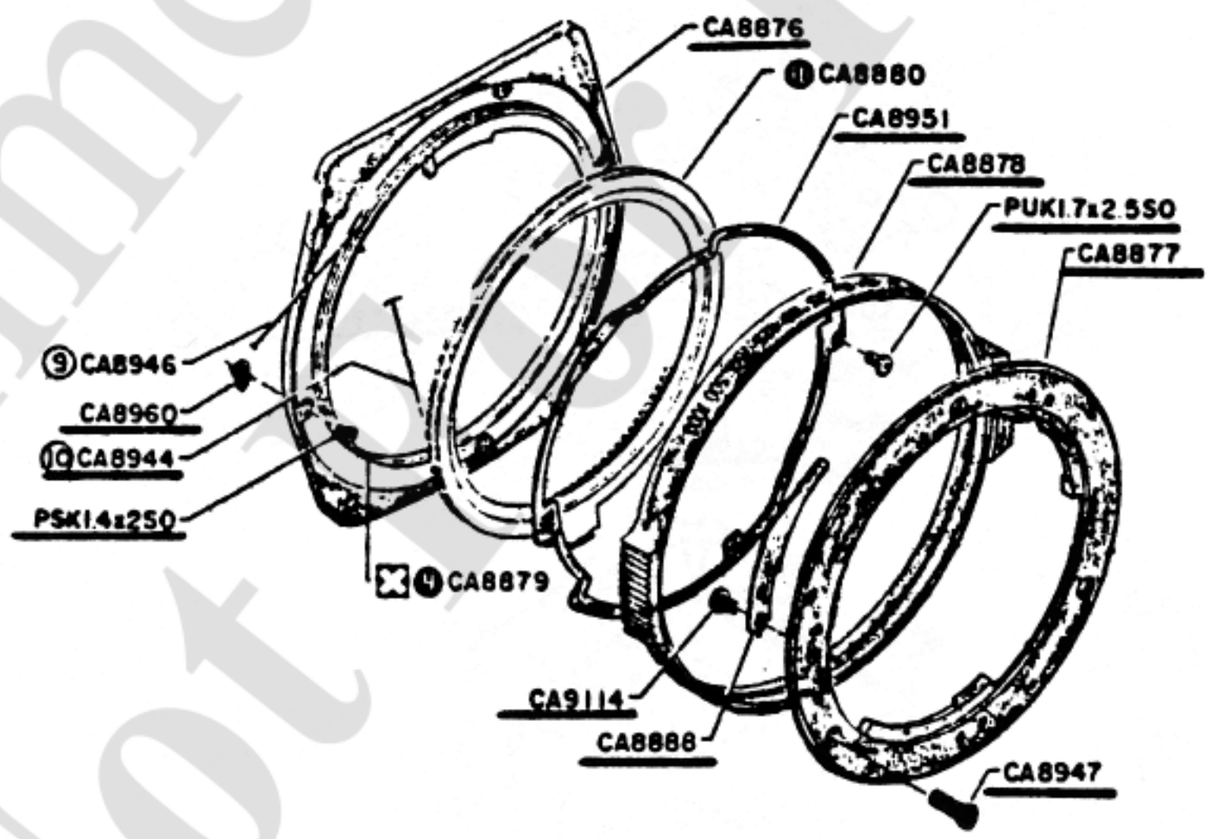

Complimentary Copy
Not for Resale

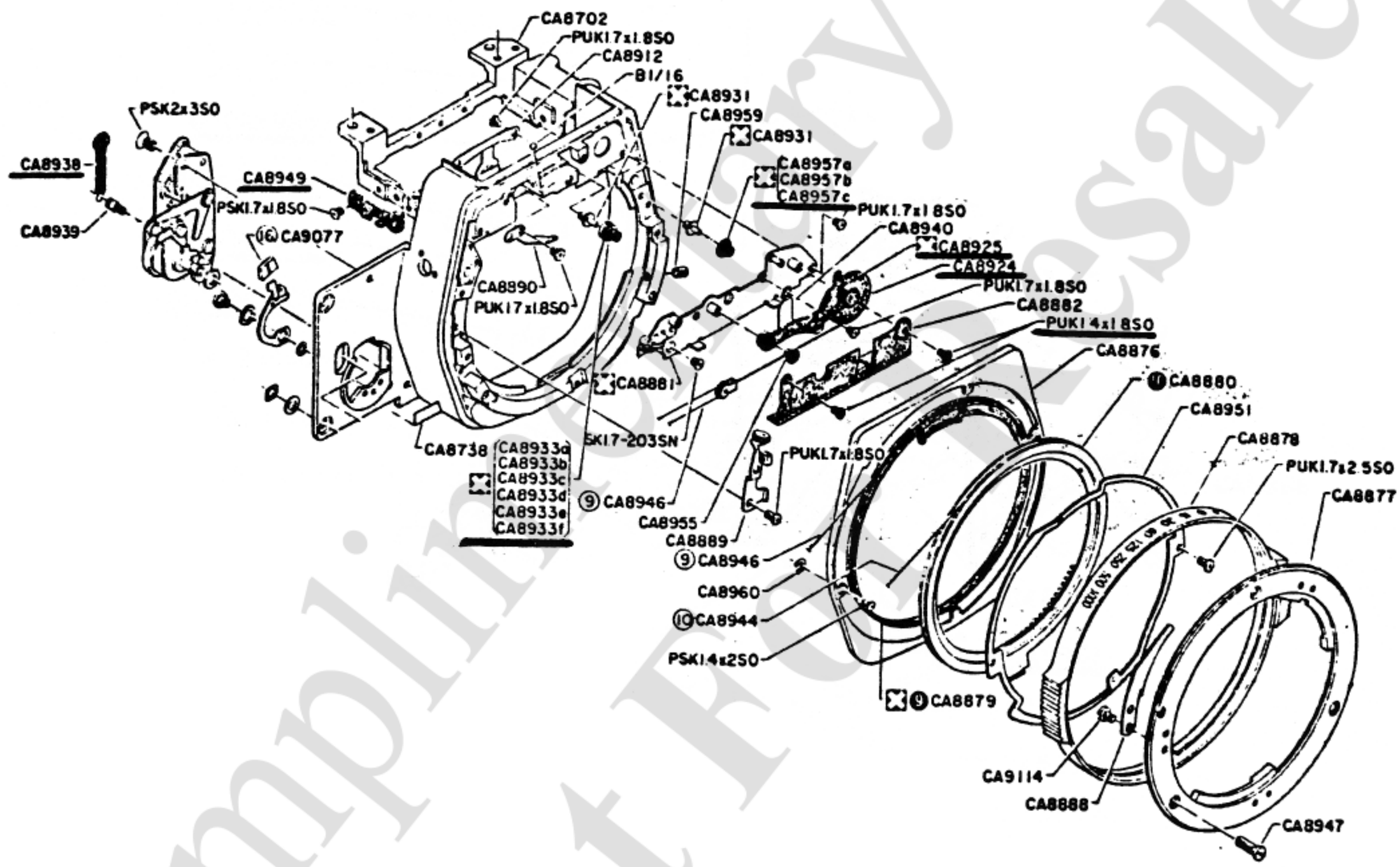

Complimentary Copy
Not For Resale

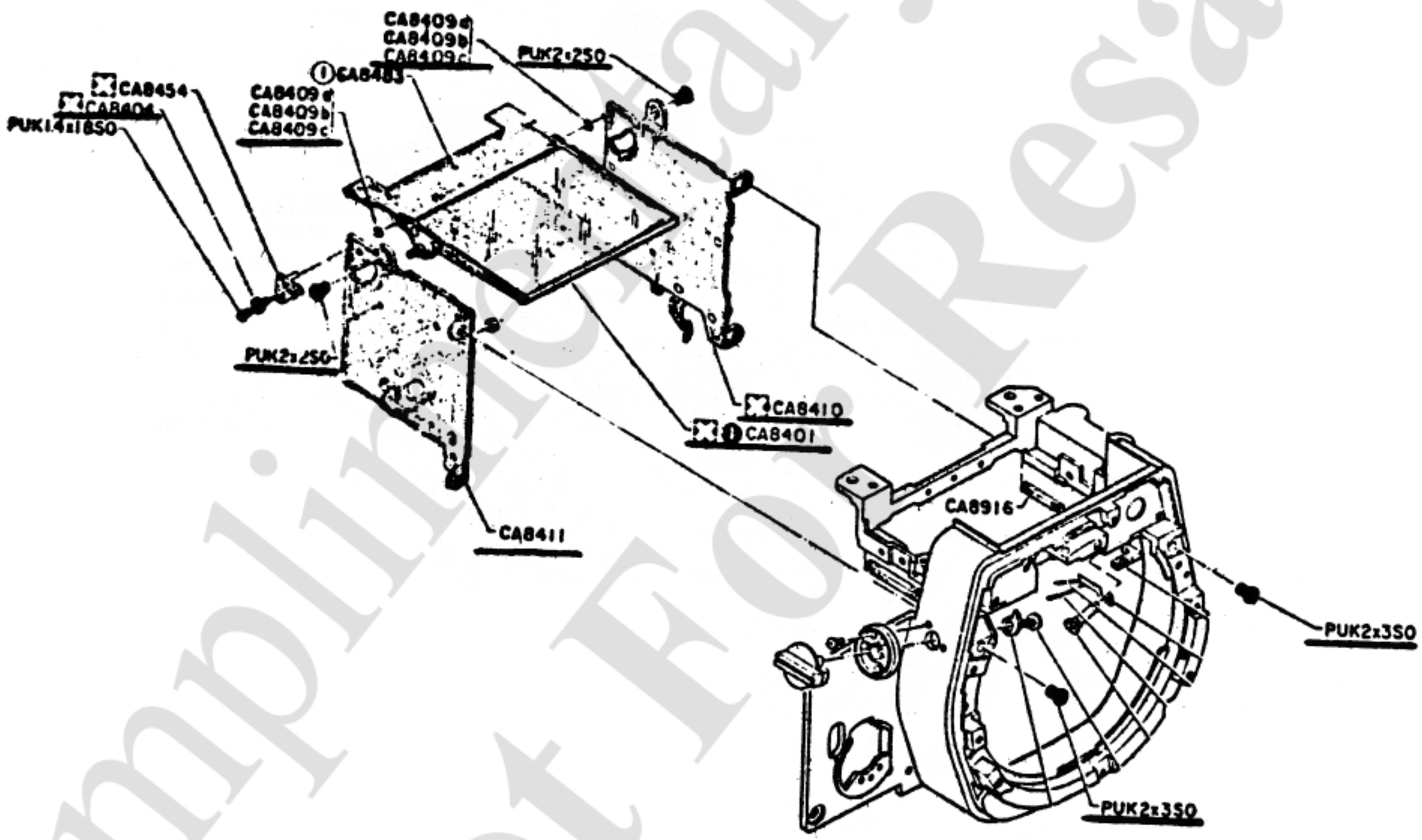

Complimentary Copy
Not For Resale

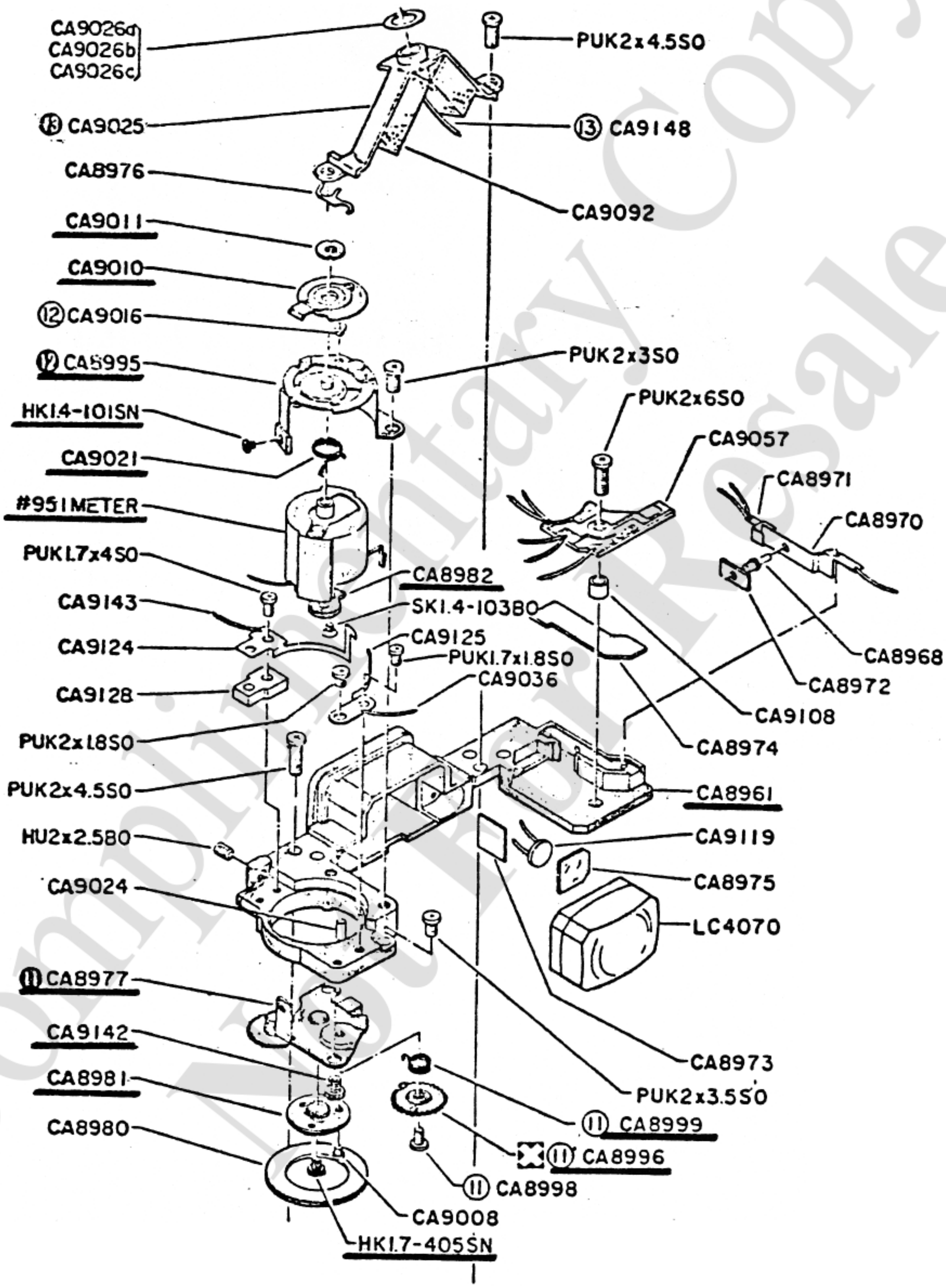

Complimentary Not For Resale