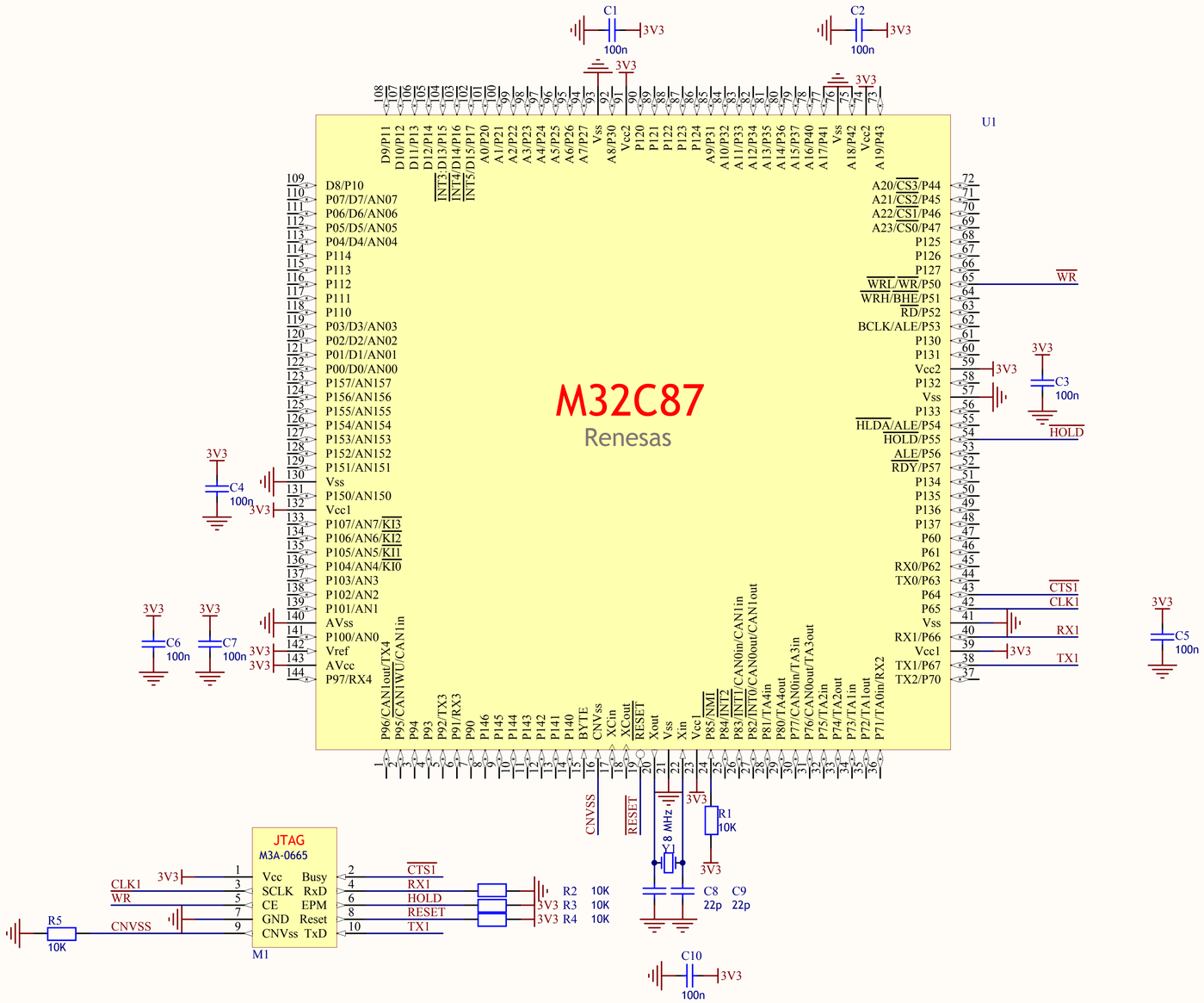

Title		
Size A3	Number	Revision
Date: 19/06/2008	Sheet of	
File: X:\2008-06-Initiation M32-Basics\..M32.Schdoc	Drawn By:	